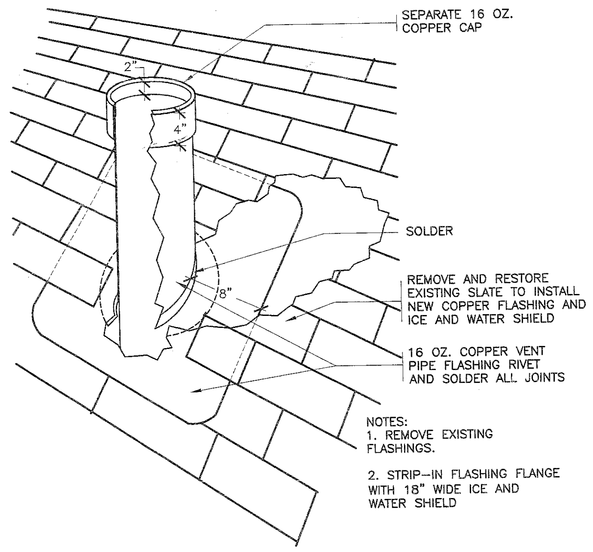

25 REVISED VENT PIPE (SLATE ROOF)
SCALE: N.T.S.

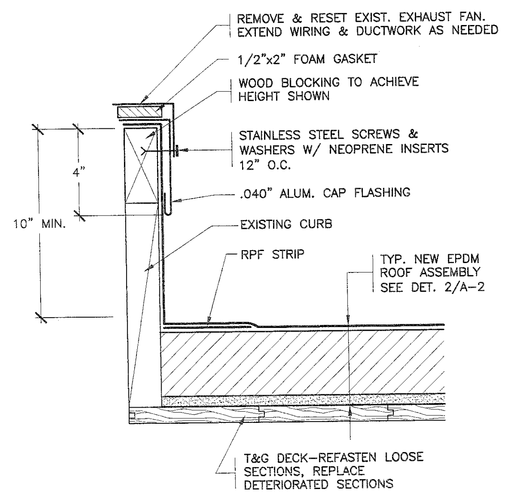

26 REVISED EXHAUST FAN
SCALE: 3" = 1'-0"

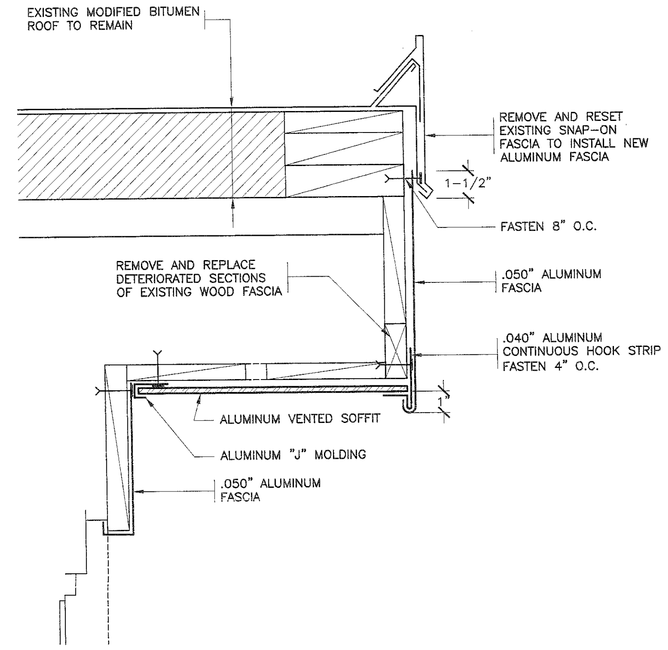

27 REVISED EAVE AT EXISTING ROOF
SCALE: 3" = 1'-0"

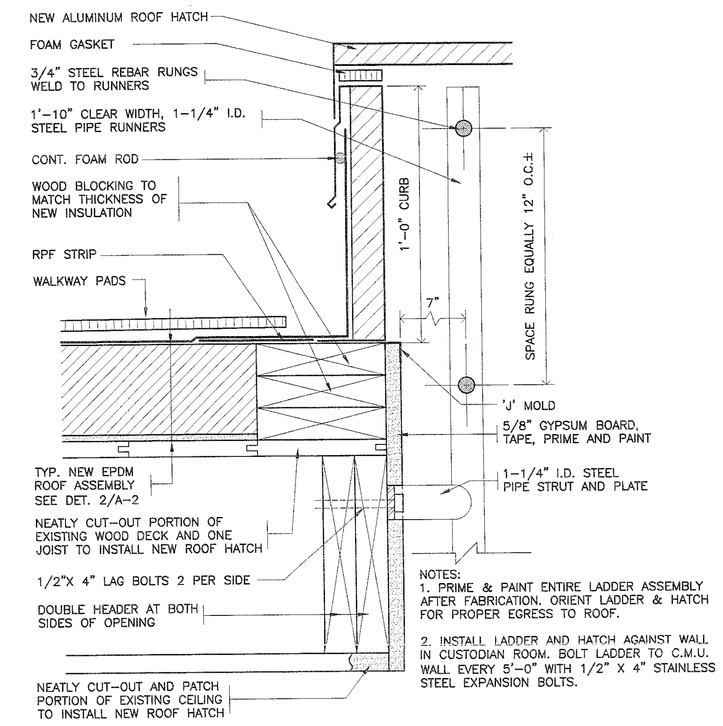

28 NEW ROOF HATCH
SCALE: 3" = 1'-0"

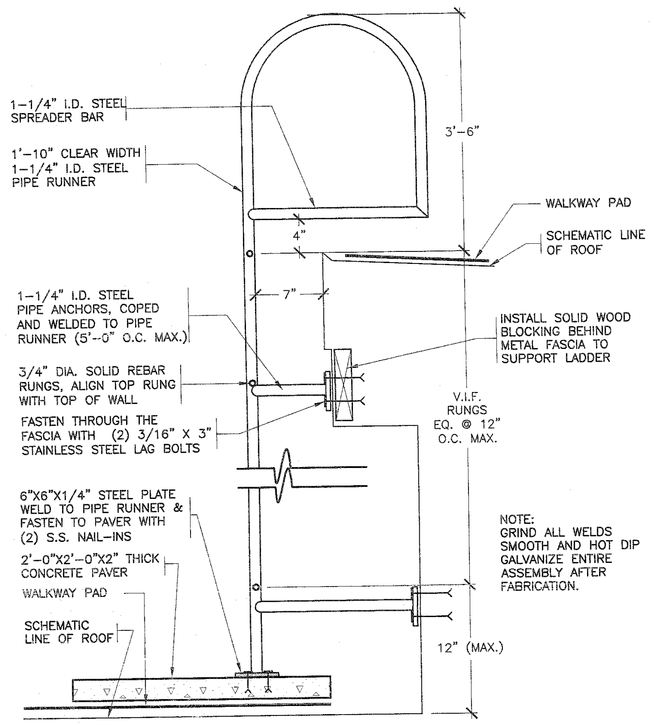

29 NEW ROOF LADDER
SCALE: N.T.S.

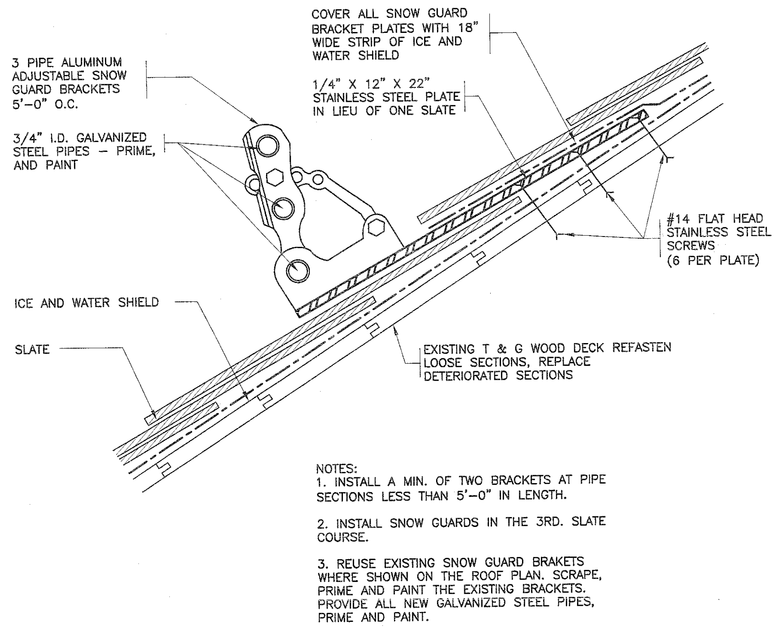

30 SNOW GUARD
SCALE: N.T.S.

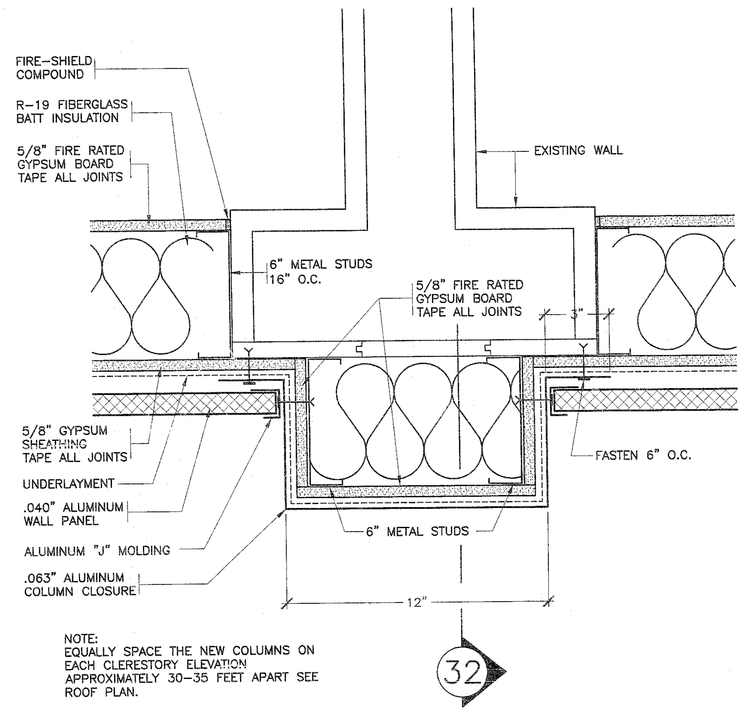

31 PLAN VIEW AT NEW COLUMN
SCALE: N.T.S.

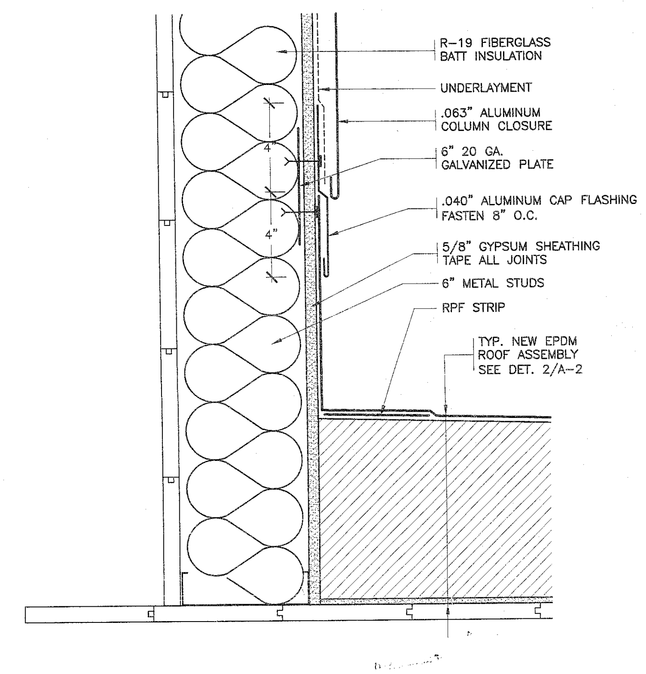

32 SECTION AT NEW COLUMN
SCALE: N.T.S.

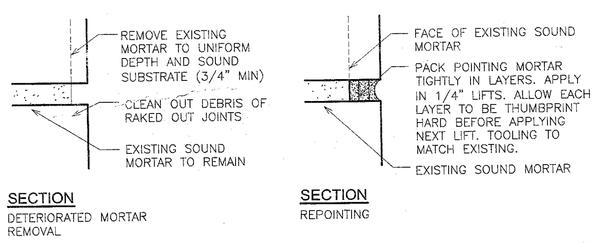

33 DETAIL – MASONRY REPOINTING
SCALE: N.T.S.

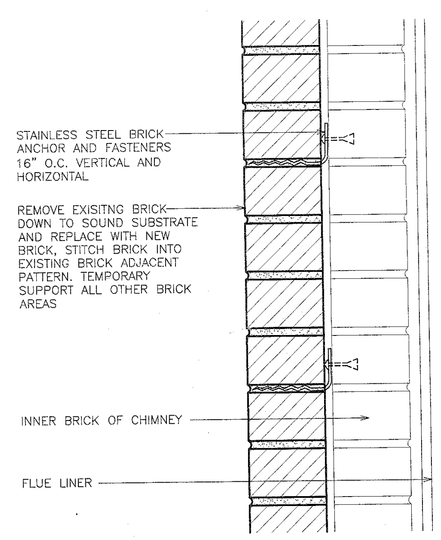

34 DETAIL – BRICK REPLACEMENT
SCALE: N.T.S.

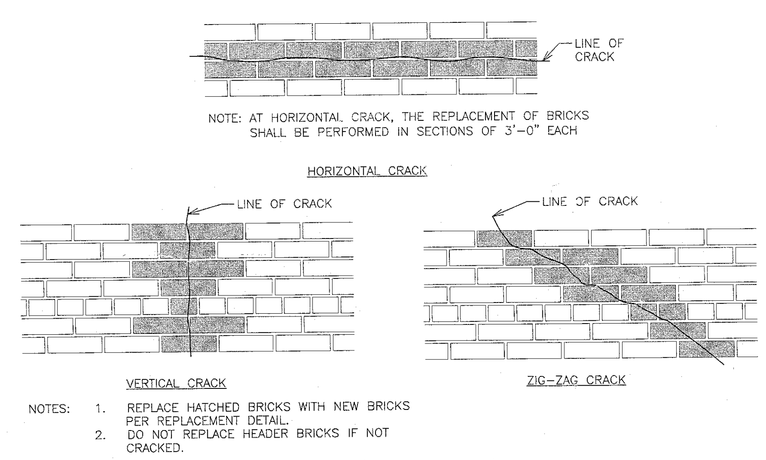

35 DETAIL – BRICK STICHING PATTERNS
SCALE: N.T.S.

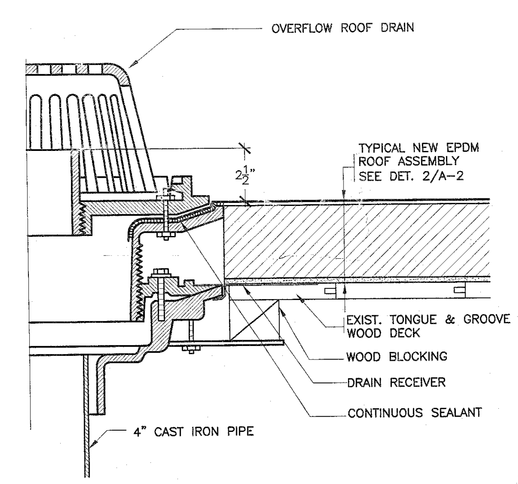

36 OVERFLOW ROOF DRAIN
SCALE: N.T.S.

HS FOR USA CONGRESS ARCHITECTURAL WORKS COPYRIGHT PROTECTION ACT OF 1990 ALL IDEAS AND DESIGNS INCLUDING DERIVATIVES THEREOF, ALL DRAWINGS AND SPECIFICATIONS CONSTITUTE THE ORIGINAL UNPUBLISHED WORK OF FULLER & D'ANGELO, P.C. (F&D). THE DRAWINGS AND SPECIFICATIONS AS INSTRUMENTS OF SERVICE ARE TO BE USED ONLY WITH RESPECT TO THIS PROJECT ONLY AND REMAIN THE PRODUCT AND PROPERTY OF F&D. ANY REPRODUCTION WITHOUT THE PRIOR CONSENT OF F&D IS PROHIBITED.

FULLER & D'ANGELO P.C. ARCHITECTS PLANNERS
49 RUSSELL STREET
TEL 413-584-7331 FAX 413-584-1717
WWW.FULLERANDDANGELO.COM
Copyright 2008 All Rights Reserved by FULLER & D'ANGELO, P.C.

PROJECT TITLE
DANBURY PUBLIC SCHOOLS
ROOF REPLACEMENT
63 PARK AVENUE
DANBURY, CT 06810

DRAWING TITLE
ROOF DETAILS & POINTING DETAILS

7-09-2009	BID
6-23-2009	BSF
6-01-2009	CITY
1-20-2009	90% SUBMISSION
DATE	ISSUED TO

SCALE AS NOTED	DRAWING NO. A-4
DRAWN BY F & D	
CHECKED BY F & D	FILE NO. 08870.00

DANBURY BID NO. 07-08-10-01
C.T. BUREAU OF SCHOOL FACILITIES PROJECT NO. TEMP 014 - GPVX

PLOT DATE: July 13, 2009 - 3:04pm