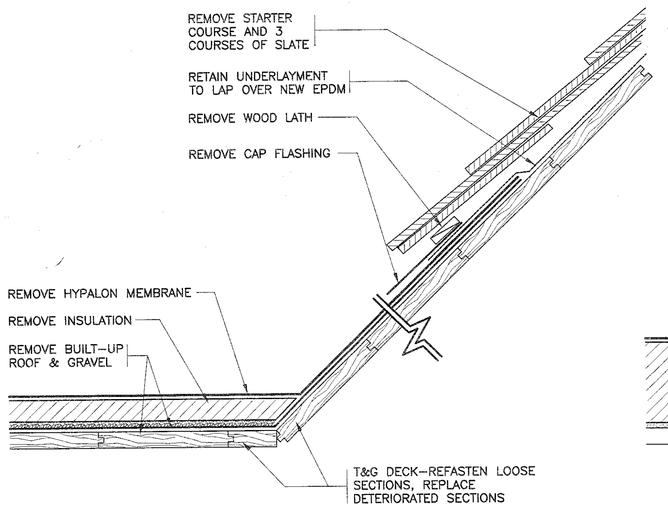

13 EXISTING TRANSITION
SCALE: 3" = 1'-0"

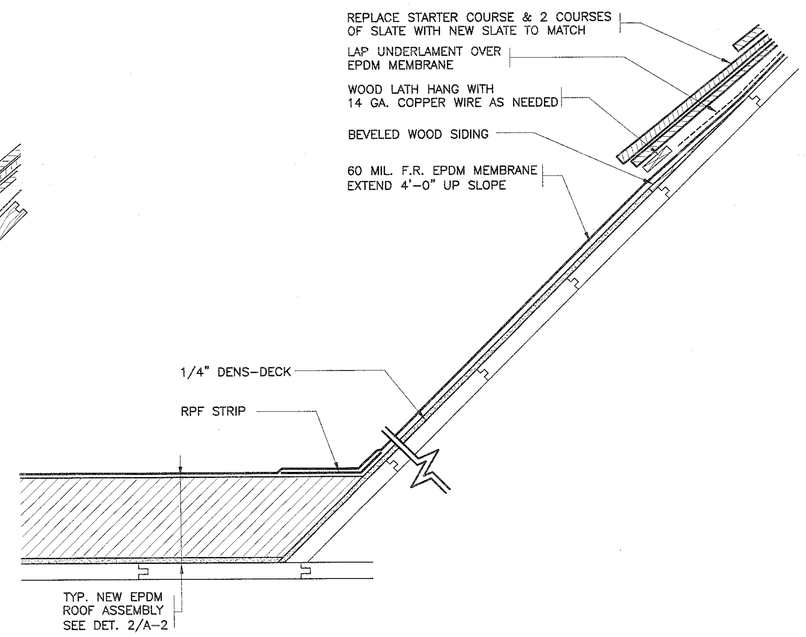

14 REVISED TRANSITION
SCALE: 3" = 1'-0"

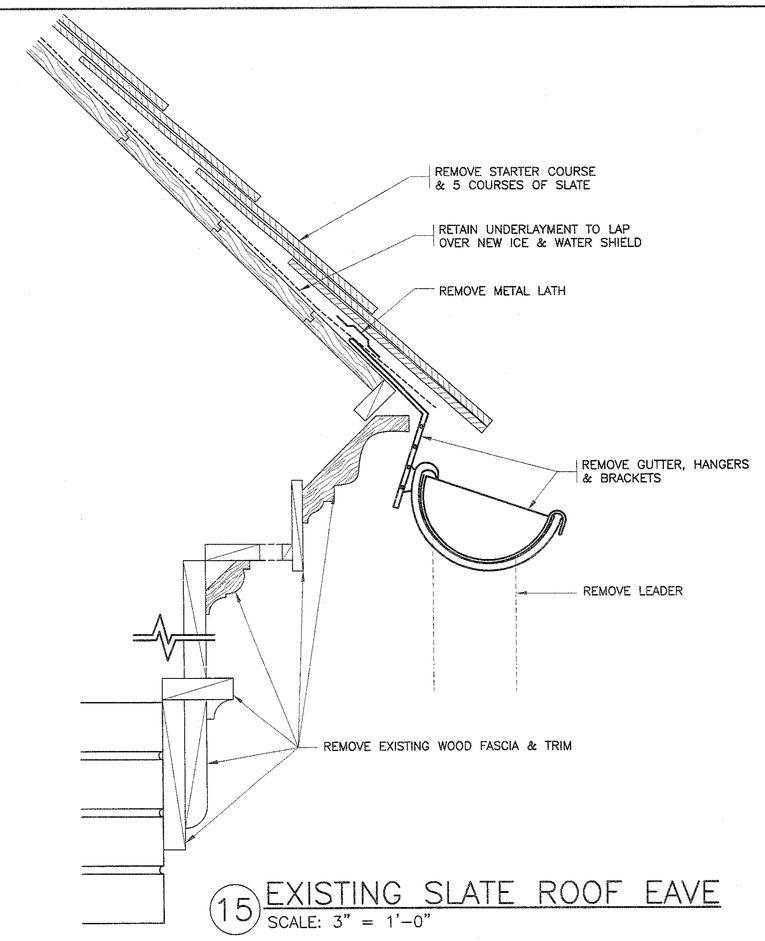

15 EXISTING SLATE ROOF EAVE
SCALE: 3" = 1'-0"

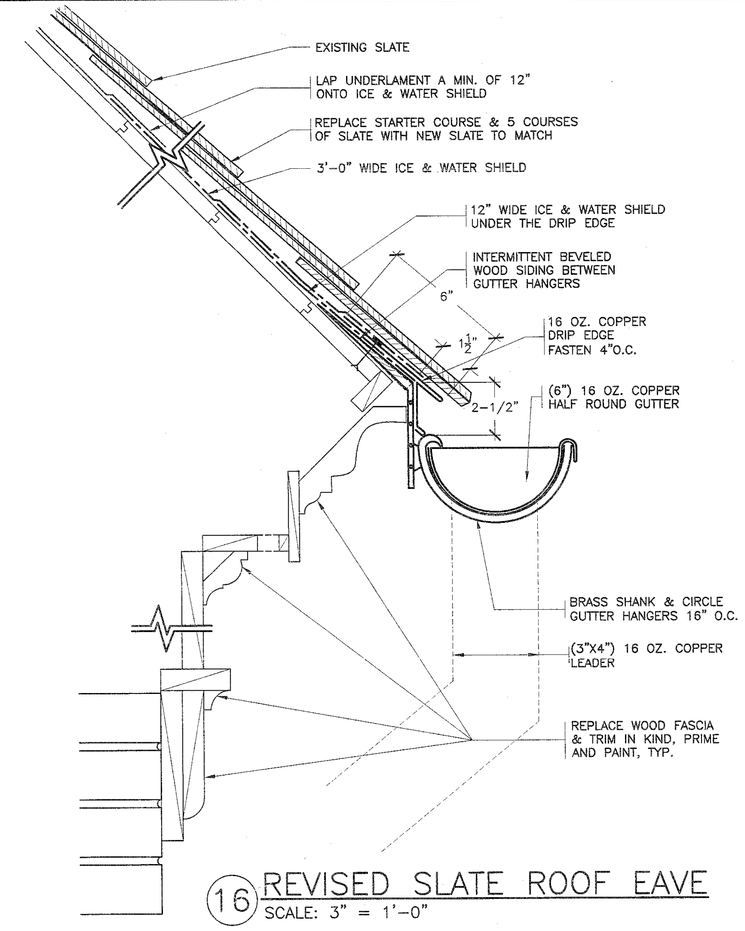

16 REVISED SLATE ROOF EAVE
SCALE: 3" = 1'-0"

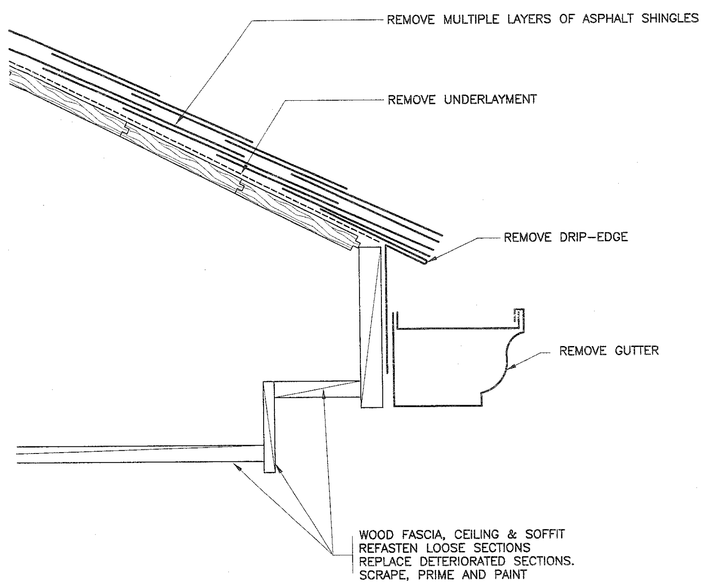

17 EXISTING EAVE
SCALE: 3" = 1'-0"

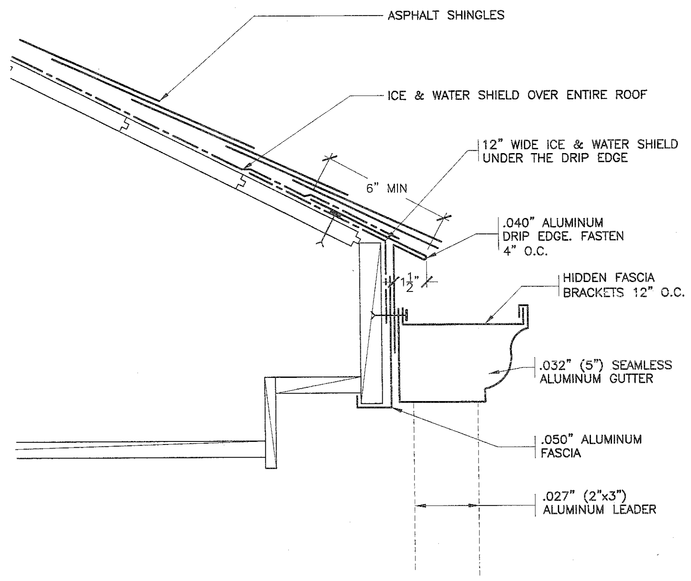

18 REVISED EAVE
SCALE: 3" = 1'-0"

NOTE:
SEE DET. 18/A-2 FOR TYPICAL REMOVALS.

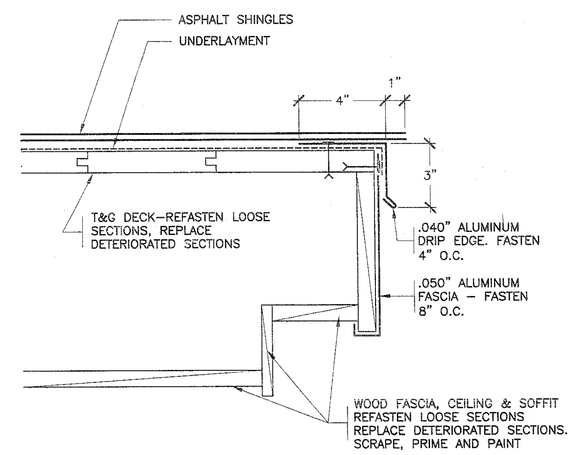

19 REVISED RAKE
SCALE: 3" = 1'-0"

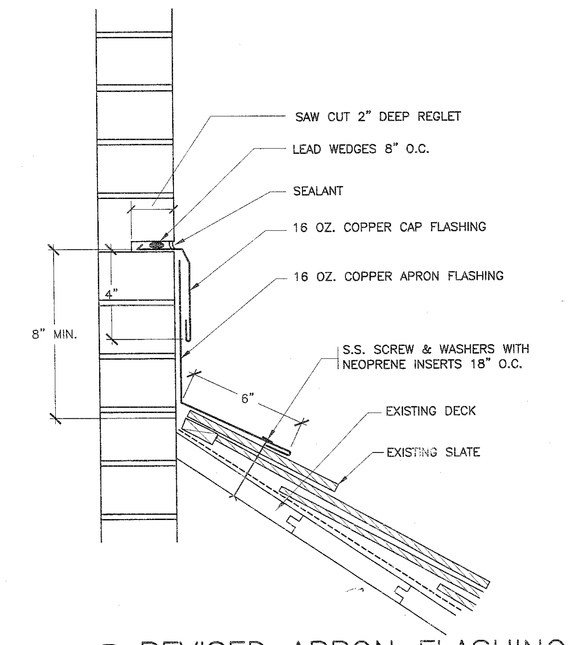

20 REVISED APRON FLASHING
SCALE: 3" = 1'-0"

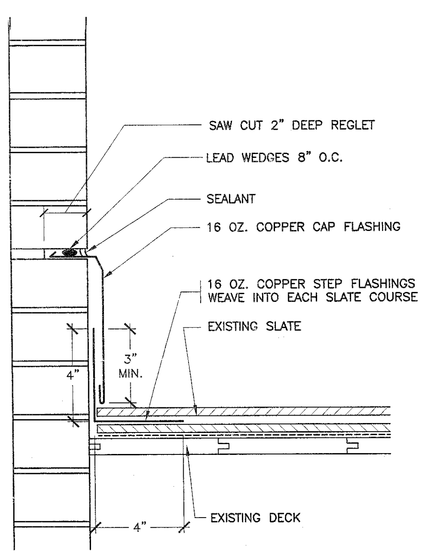

21 REVISED STEP FLASHING
SCALE: 3" = 1'-0"

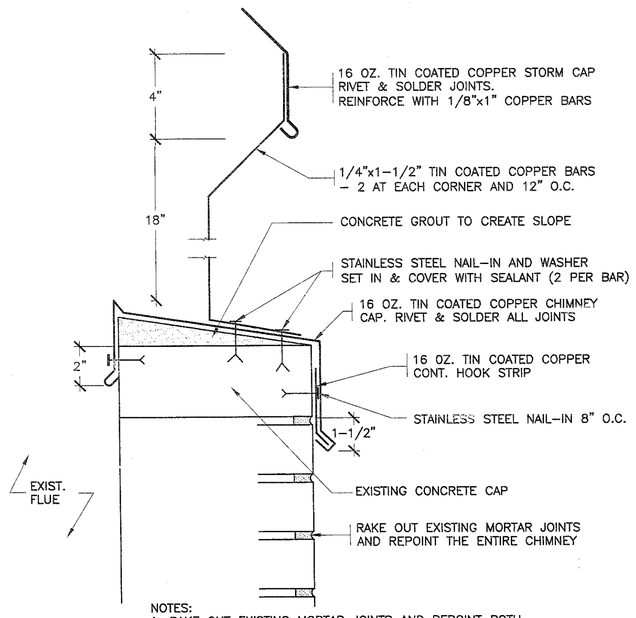

NOTES:
1. RAKE OUT EXISTING MORTAR JOINTS AND REPOINT BOTH CHIMNEYS FROM THE TOP TO THE CAP FLASHING. REMOVE AND REPLACE ALL DETERIORATED AND CRACKED BRICKS (ESTIMATED QUANTITY 200 SQ. FT.).

2. COVER THE ENTIRE CHIMNEY TOP WITH 16 OZ. TIN COATED COPPER CHIMNEY CAP. RIVET AND SOLDER ALL JOINTS.

22 REVISED CHIMNEY CAP
SCALE: N.T.S.

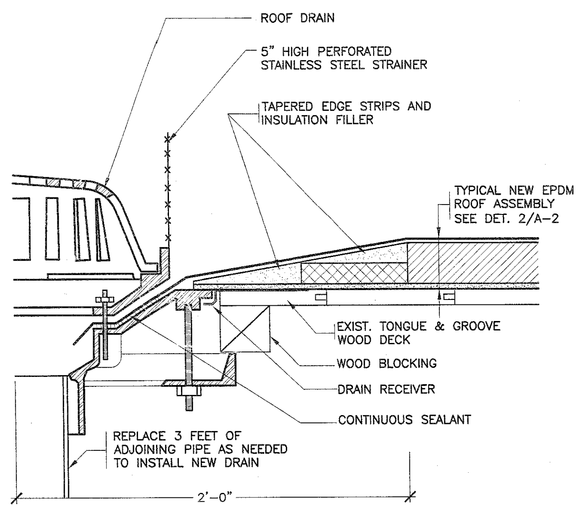

NOTES:
1. REMOVE EXISTING ROOF DRAINS AND RELATED FLASHINGS.

2. INSTALL TAPERED EDGE STRIPS & INSULATION FILLERS TO CREATE A 4 FT x 4 FT. SQUARE SUMP AT EACH DRAIN.

23 REVISED ROOF DRAIN
SCALE: N.T.S.

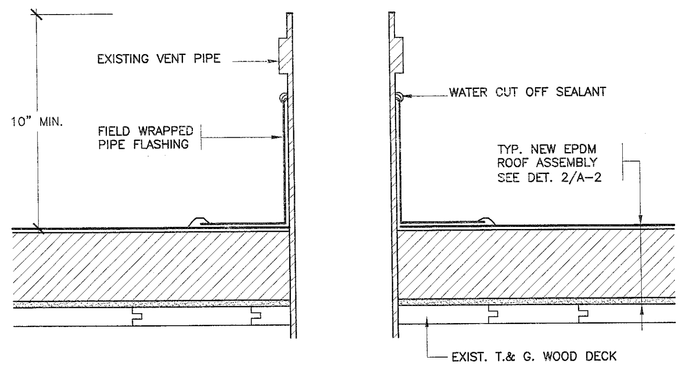

NOTES:
1. REMOVE ALL EXISTING FLASHINGS.

2. REMOVE KENNEDY COUPLINGS AND EXTEND VENT PIPES TO MEET MIN. HEIGHT REQUIREMENT.

24 REVISED EPDM VENT PIPE
SCALE: 3" = 1'-0"

AS PER USA CONGRESS ARCHITECTURAL WORKS COPYRIGHT PROTECTION ACT OF 1990 ALL IDEAS AND DESIGNS INCLUDING DERIVATIVES THEREOF, ALL DRAWINGS AND SPECIFICATIONS CONSTITUTE THE ORIGINAL, COPYRIGHT WORK BY FULLER AND D'ANGELO, P.C. (F&D). SUCH DRAWINGS AND SPECIFICATIONS AS THE DRAWINGS AND SPECIFICATIONS AS WRITTEN OR DRAWN BY F&D ARE CREATED BY F&D FOR THIS PROJECT ONLY AND REMAIN THE PRODUCT AND PROPERTY OF F&D. ANY REPRODUCTION WITHOUT THE PRIOR CONSENT OF F&D IS PROHIBITED.

FULLER D'ANGELO P.C. ARCHITECTS PLANNERS
49 DISTLERFIELD ROAD SHERFIELD NEW YORK 12832
TEL 914-992-1717 FAX 914-992-1719
WWW.FULLERDANGELO.COM
Copyright © 2009 Fuller & D'Angelo P.C.

PROJECT TITLE
PARK AVENUE ELEMENTARY SCHOOL
ROOF REPLACEMENT
82 PARK AVENUE
DANBURY, CT 06810

DRAWING TITLE
ROOF DETAILS

DATE	ISSUED TO
7-09-2009	BID
6-23-2009	BSF
6-01-2009	CITY
1-28-2009	90% SUBMISSION

SCALE: AS NOTED
DRAWN BY: F & D
CHECKED BY: F & D
DRAWING NO.: A-3
FILE NO.: 08870.00

DANBURY BID NO. 07-08-10-01
C.T. BUREAU OF SCHOOL FACILITIES PROJECT NO. TEMP 004 - GPVX

PLOT DATE: July 13, 2009 - 3:04pm

FILE: H:\08870.00 Danbury Park Ave Elementary\DRAWINGS\CURRENT\1-F&D\A-3 Danbury ES Details 13-24.dwg