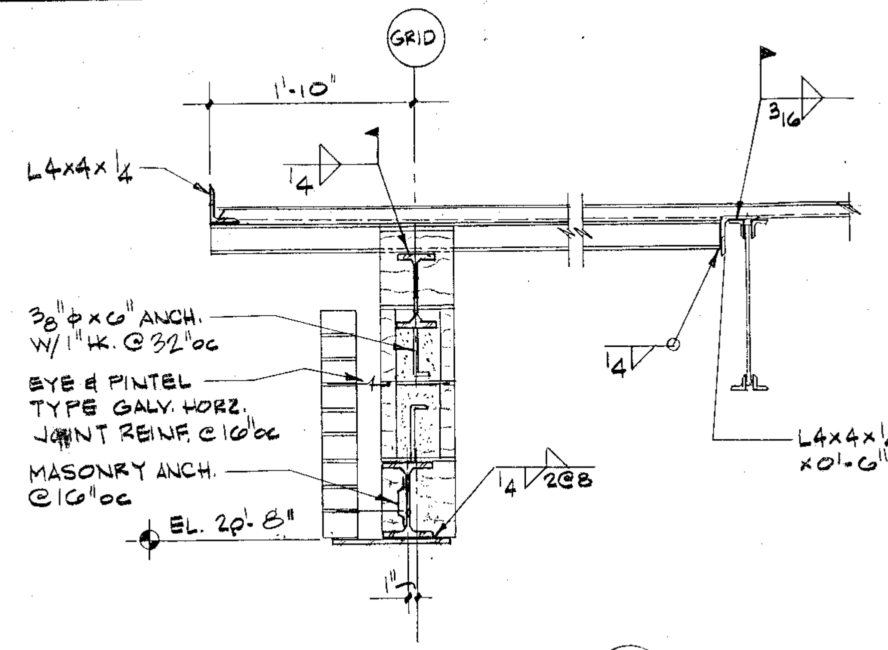

SECTION 6/S2
3/4" = 1'-0"

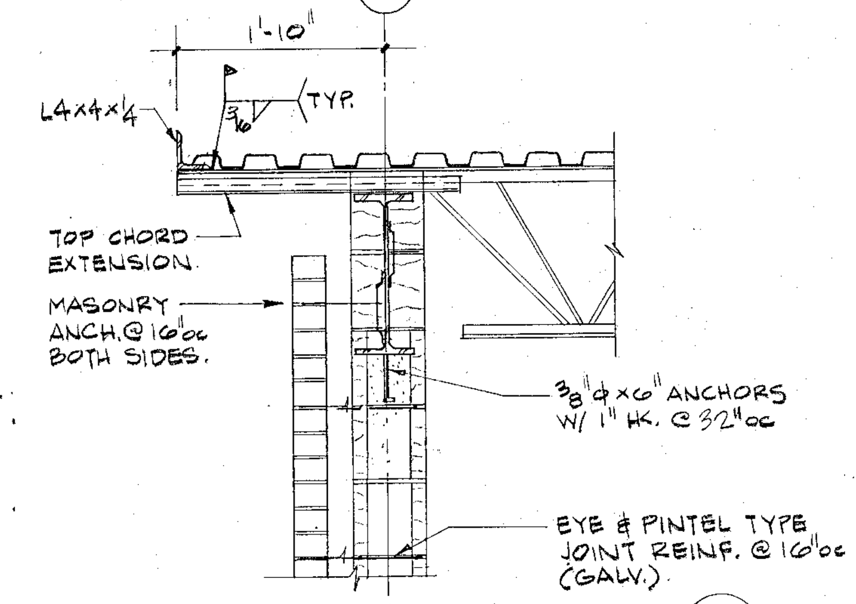

SECTION 7/S2
3/4" = 1'-0"

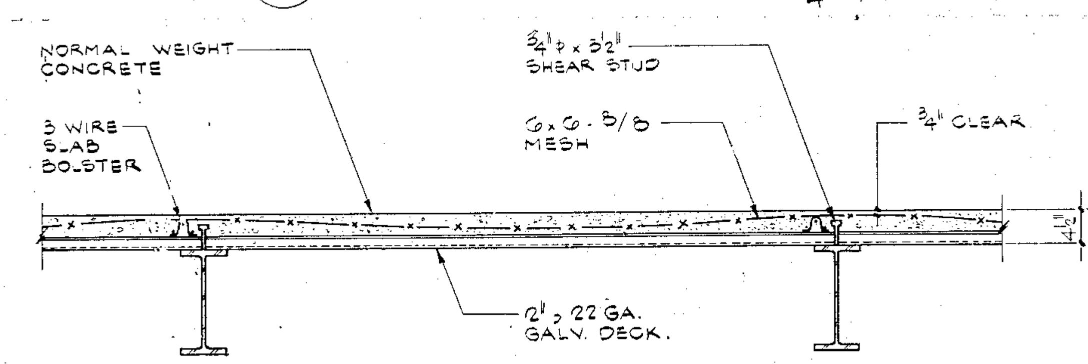

TYPICAL FLOOR CONSTRUCTION
NO SCALE

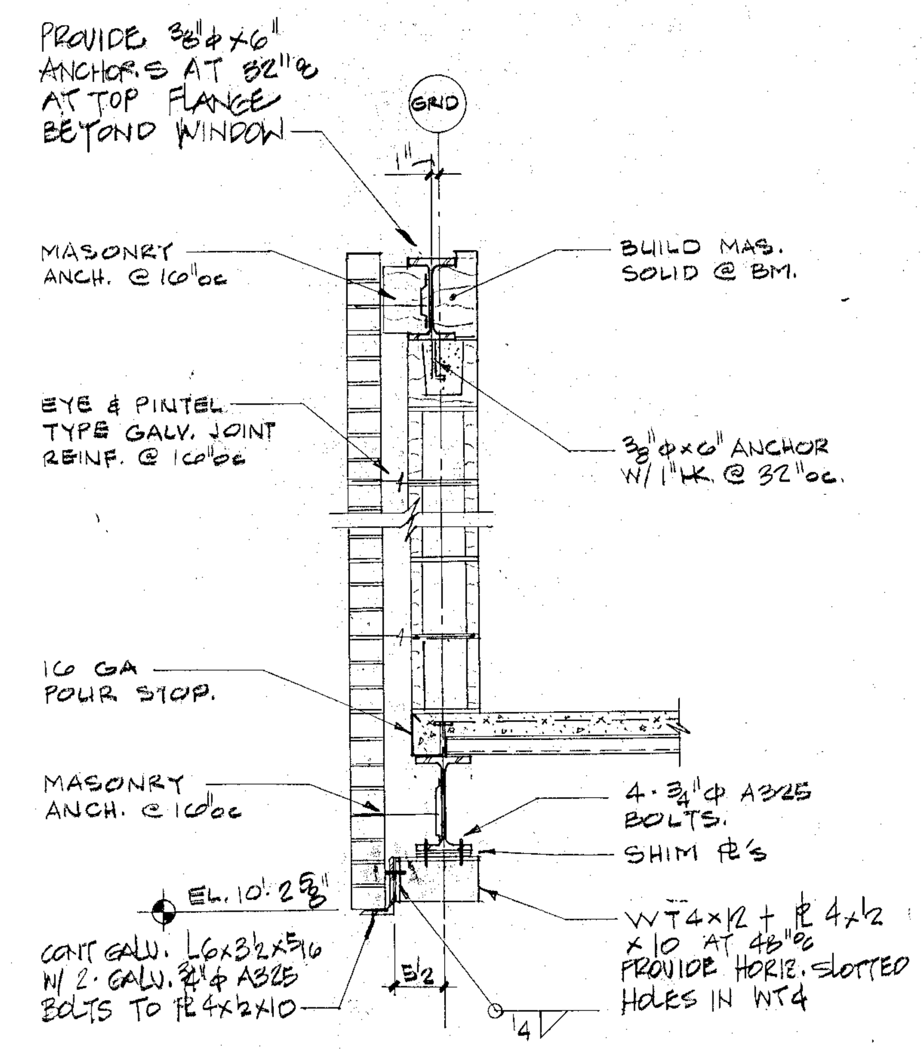

SECTION 8/S2
3/4" = 1'-0"

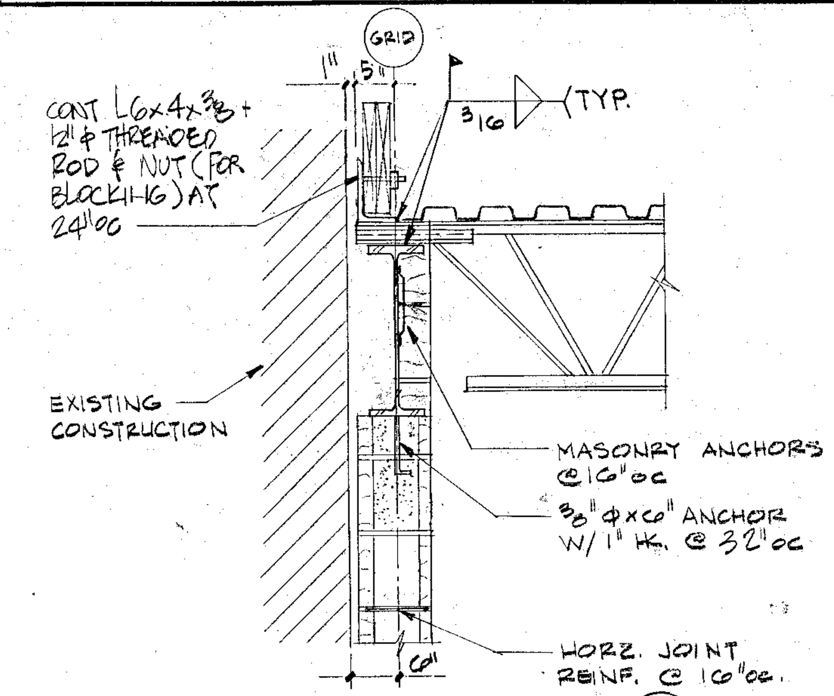

SECTION 9/S2
3/4" = 1'-0"

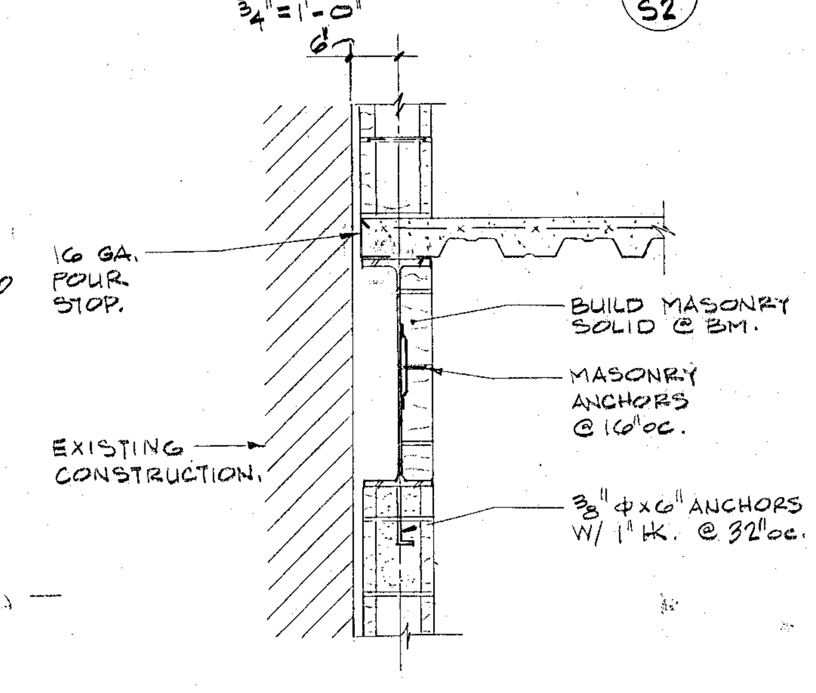

SECTION 5/S2
3/4" = 1'-0"

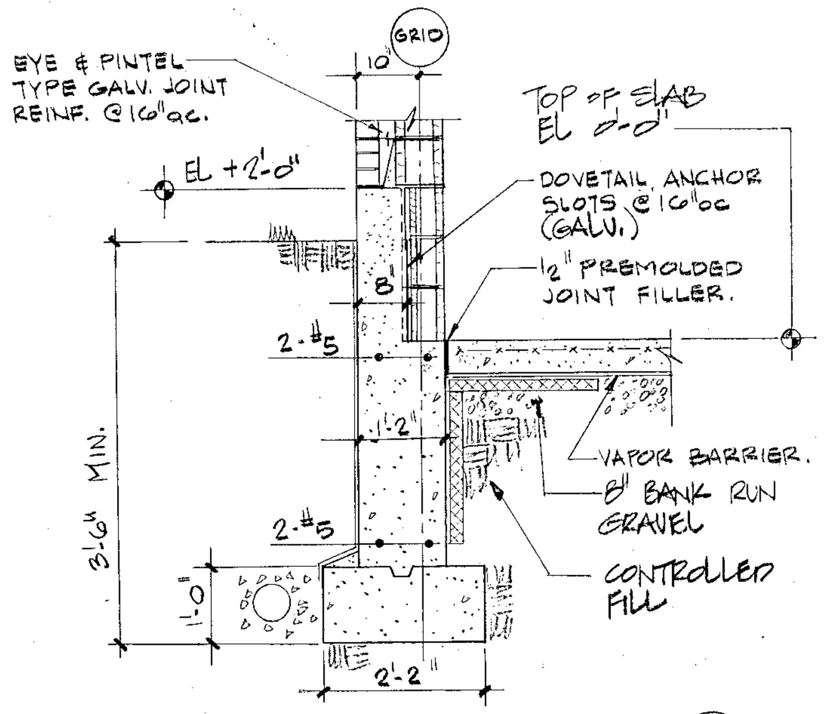

SECTION 1/S2
1/2" = 1'-0"

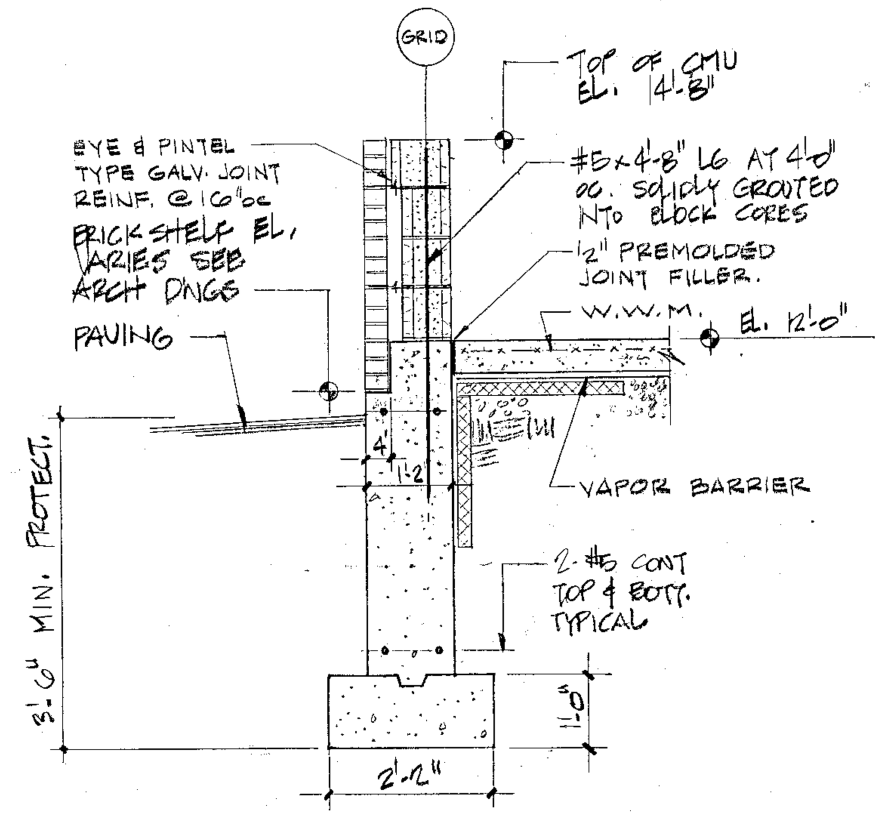

SECTION 2/S2
1/2" = 1'-0"

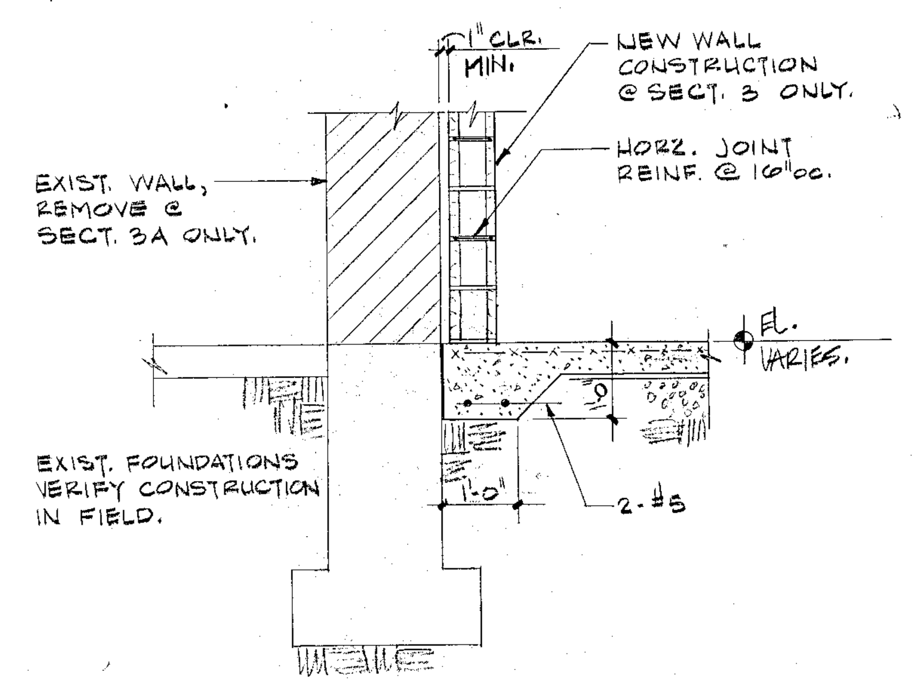

SECTION 3/S2 3A/S2
2" = 1'-0"

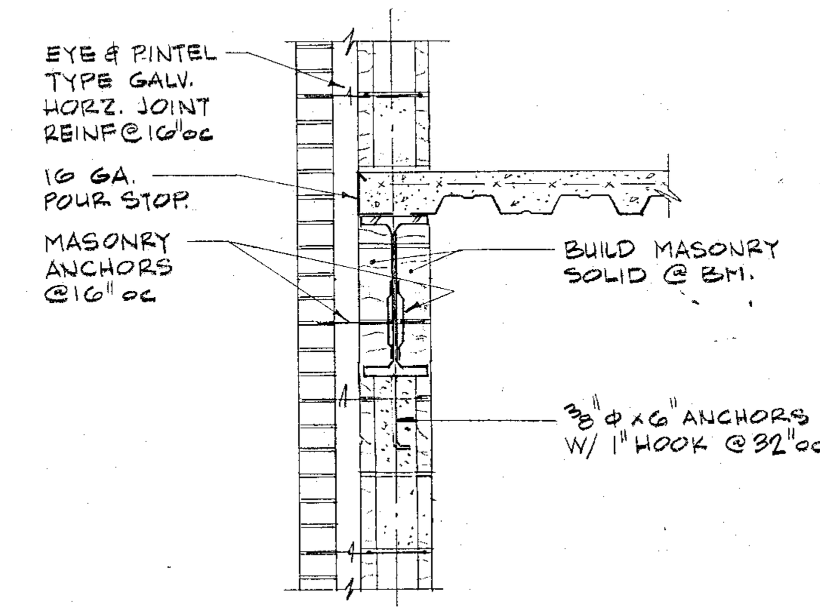

SECTION 4/S2
3/4" = 1'-0"

GENERAL NOTES

GENERAL:

1. All details shall be considered typical and shall apply at all same and similar conditions.
2. The Contractor shall field measure and verify all dimensions of the existing building and all dimensions related thereto.
3. The Contractor shall be responsible for all temporary shoring and bracing required to maintain the structural stability of the building during construction.
4. All work shall be in accordance with the BOCA "National Building Code."
5. A registered Professional Engineer shall be engaged to provide Special Inspections in accordance with BOCA Section 1307.
6. Testing shall be performed by a NVLAP accredited testing laboratory, ~~paid by the Contractor and~~ approved by the Engineer and Building Inspector.

FOUNDATION:

1. Design assumption: soil bearing capacity is 2 tons per square foot in accordance with the "Soil/Foundation Analysis" report prepared by the office of H.L. Lobdell Consulting Engineers, P.A. and dated July 27, 1990.
2. Footings shall bear on undisturbed virgin soil, free of frost, mud, or ice or on compacted crushed stone in the areas that fill is removed or the existing natural soils are wet or soft.
3. A representative from the office of H.L. Lobdell Consulting Engineer, P.A. shall inspect all footing sub-bases prior to pouring concrete to verify that footings are resting on suitable soil.
4. Footing sub-base shall be compacted using a vibratory tamper or a jumping soil rammer after the soil has been inspected and approved.
5. Bottom of footing elevations noted thus [xxxx] are approximate and shall be verified in the field.
6. A representative from the office of H.L. Lobdell Consulting Engineer, P.A. shall inspect and approve the soil below the slab-on-grade prior to pouring concrete.
7. Install Moistop vapor barrier under all slabs on grade.

CONTROLLED FILL:

1. The soil below the new slab on grade shall be undisturbed virgin soil or controlled fill.
2. Material used for controlled fill shall be clean bank run gravel containing not more than 10 percent by weight passing the #200 sieve. The maximum size of gravel shall be six inches.
3. Fill material shall be placed in layers not to exceed 8 inches in thickness and compacted with a vibratory roller to 95 percent of the maximum dry density obtained by test.
4. Fill material shall be compacted at or near the optimum moisture content.

CAST-IN-PLACE CONCRETE:

1. Concrete strength at 28 days: 3000 psi.
2. Air-entrain all concrete exposed to the weather.
3. Reinforcing steel: ASTM A615 grade 60.
4. Maximum slump:
   4 inches for slabs
   5 inches for all other concrete.
5. Interior floor slab shall receive a steel trowel finish. Exterior slabs and sidewalks shall receive a coarse broom finish.
6. Grout and rub all exposed surfaces of foundation walls within 48 hours of pour.
7. Special Inspections shall be made of reinforcing steel and concrete placement.

STRUCTURAL STEEL:

1. Structural steel:
   ASTM A36 for rolled shapes
   ASTM A500 grade B for tube shapes
2. Bolts: ASTM A325, 3/4" diameter. Bolts shall be tightened by the turn of the nut method unless direct tension indicator bolts are used.
3. Where masonry abuts steel, weld adjustable masonry anchors to steel 1'-4" o.c. on beams and columns. Masonry anchors shall be 1/4" diameter Flex-O-Lok anchors by AA Wire Products Company.
5. Welders shall be certified in accordance with AWS standard qualification procedures.
6. Typical loose lintel for concrete masonry walls shall be one L 5 x 3 1/2 x 5/16 for each four inches (4") of nominal wall thickness for openings up to eight feet (8'-0") wide. Exterior lintels shall be hot-dip galvanized. Minimum bearing for lintels is eight inches (8"). Grout concrete maonry unit cells solid beneath steel lintel bearing for three (3) courses.
7. Steel frame shall be braced with temporary guy cables until all connections have been completed.
8. Steel open web joists shall be fabricated and installed in accordance with SJI specifications.
9. Where structural steel is in contact with masonry of exterior walls, or is exposed to the cavity of an exterior masonry wall, coat the steel with Karnak 83 Fibrated Damproofing, non-asbestos grade.
10. Special Inspections shall be made of the structural steel in the shop and in the field.

DESIGN LOADS:

1. The structure has been engineered to resist the following design loads in accordance with BOCA Article 11.
2. Floor live loads:
   library live load - 150 psf
3. Snow load:
   ground snow load - P_g = 30 psf
   importance factor - I = 1.0
   exposure factor - C_e = 0.7
   flat roof snow load - $P_f = C_e \times I \times P_g$ = 21 psf
   The roof structure was engineered for a minimum snow load of 30 psf plus snow drift loads where the low roof abuts the high roof in accordance with BOCA 1111.7.
4. Wind load:
   basic wind speed - 80 mph
   exposure classification - B
   importance factor - I = 1.03
5. Earthquake load:
   seismic zone - 2
   horizontal force factor - K = 1.00
   importance factcr - I = 1.0
   soil profile coefficient - S = 1.0
   Earthquake loads are resisted by steel braced frames and moment resistant frames.

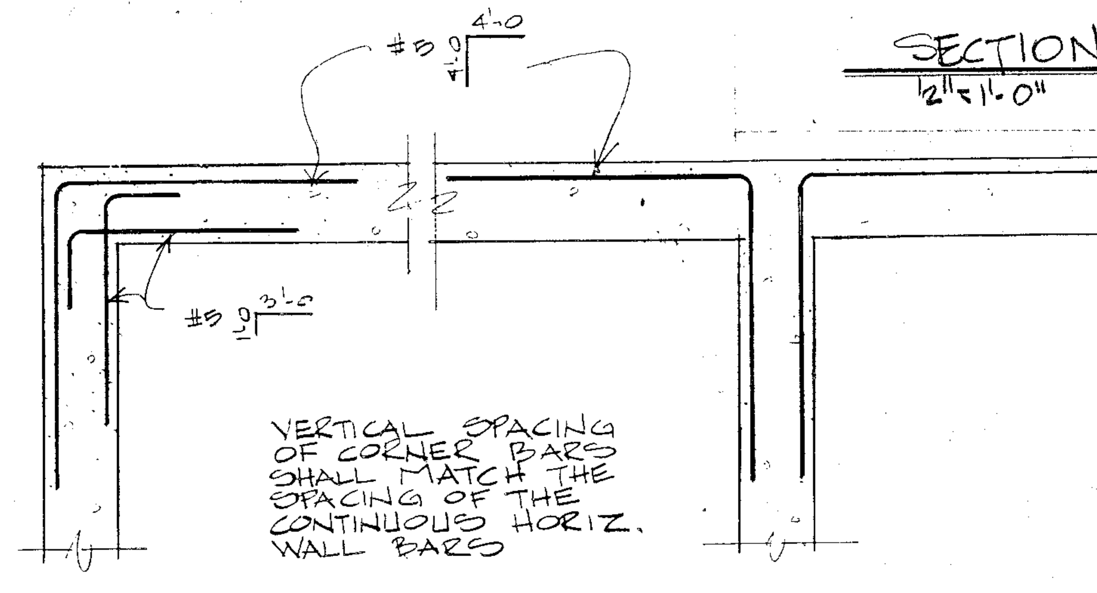

CORNER WALL REINFORCING DETAIL
SCALE: 1/2" = 1'-0

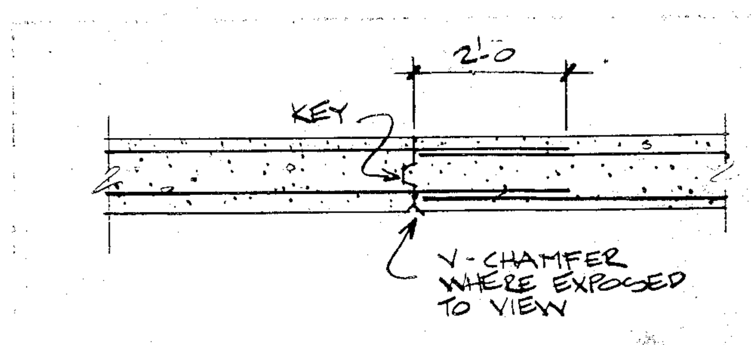

WALL CONSTRUCTION JOINT
1/2" = 1'-0

NOTE: SAW CUT JOINTS WITHIN 24 HOURS OF SLAB POUR. FILL JOINTS WITH JOINT SEALANT

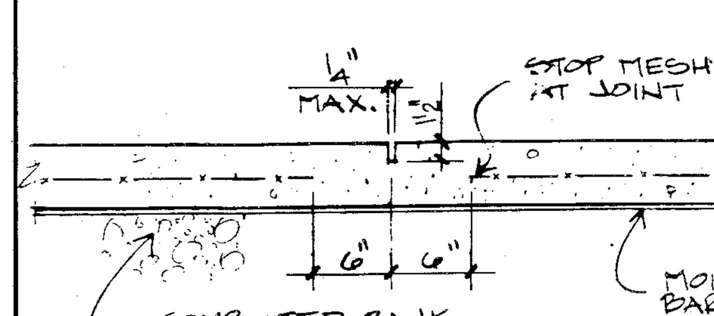

CONTROL JOINT

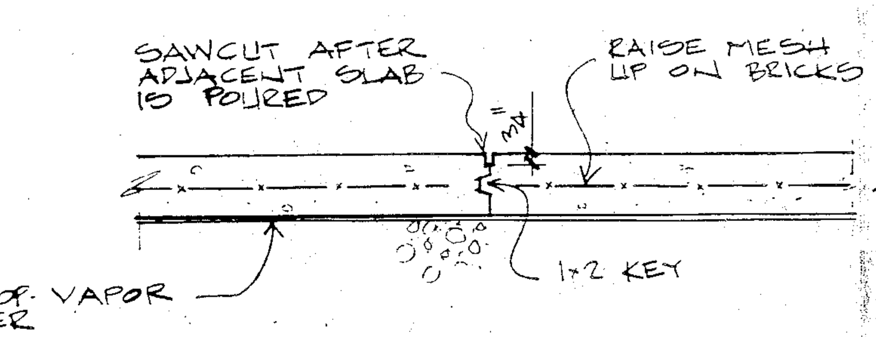

CONSTRUCTION JOINT

SLAB ON GRADE DETAILS
SCALE: 1" = 1'-0

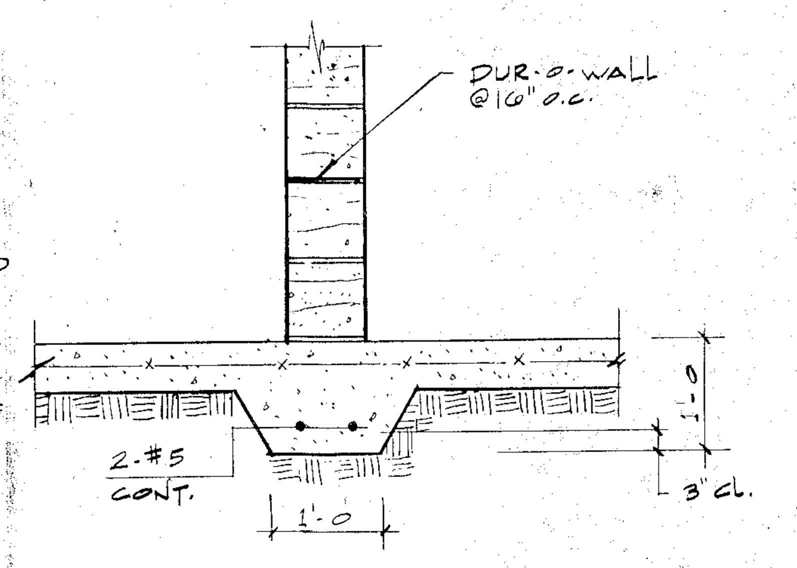

DETAIL - THICKENED SLAB UNDER MASONRY PARTITIONS
SCALE: 3/4" = 1'-0

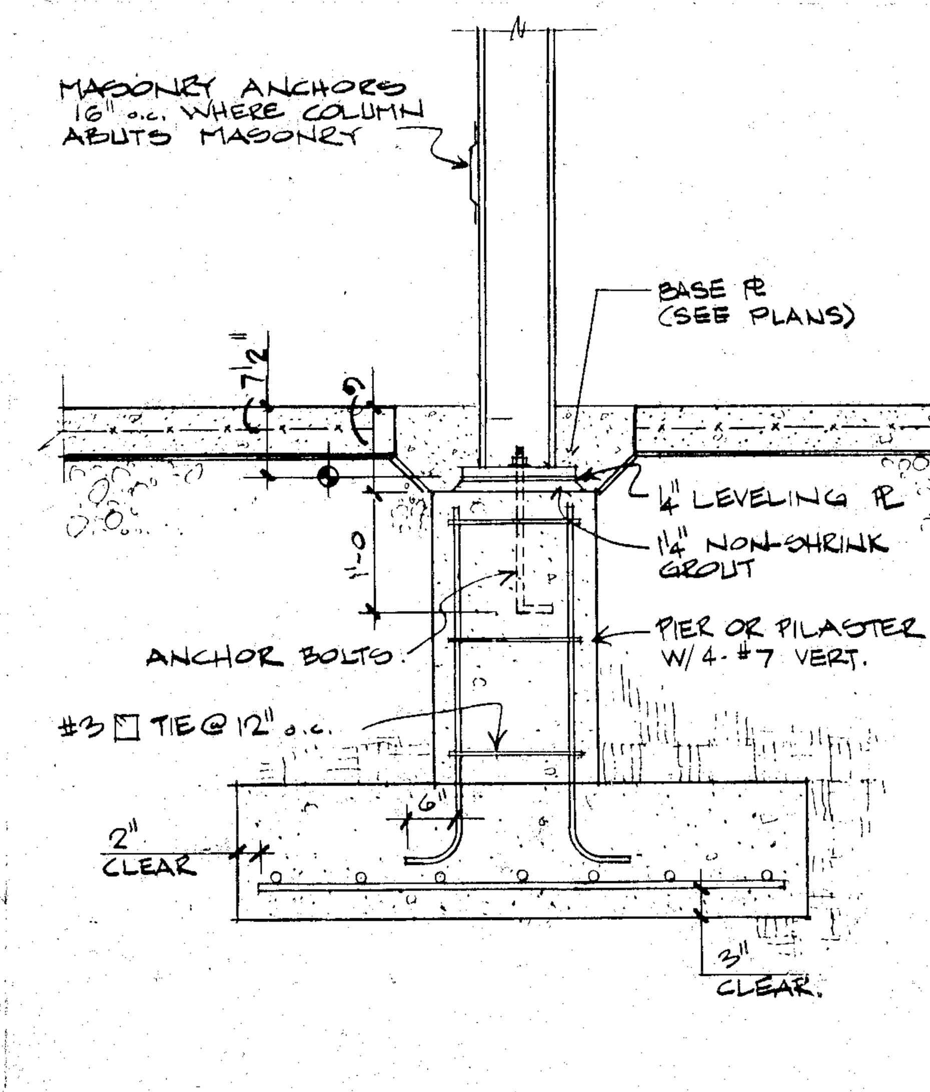

TYPICAL COLUMN BASE, PIER, & FOOTING
3/4" = 1'-0

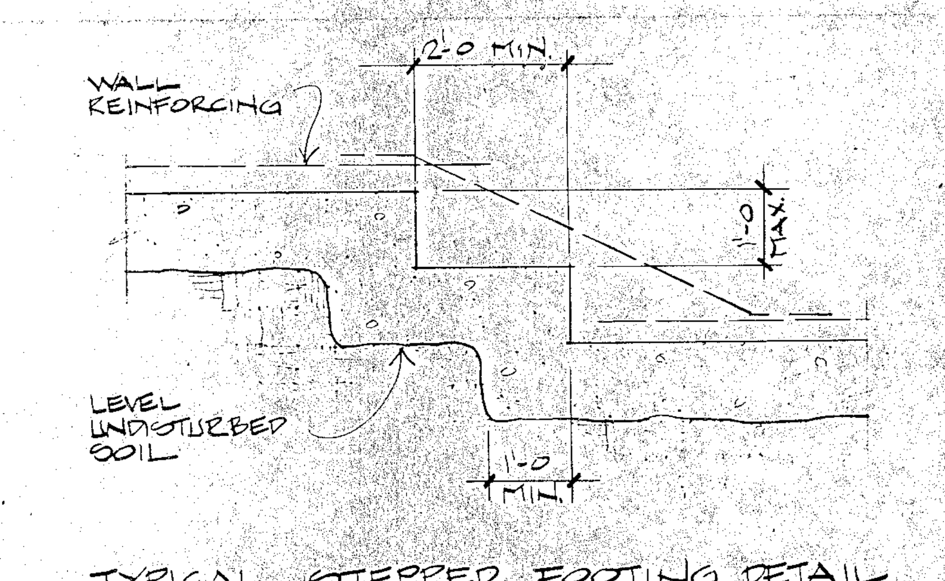

TYPICAL STEPPED FOOTING DETAIL
1/2" = 1'-0

STATE PROJECT #034-89-115-EA

DeStefano Associates
Consulting Structural Engineers
50 Thorpe Street
Fairfield, CT 06430
(203) 254-7131

Antinozzi Associates Architects
4021 Main Street
Stratford, Connecticut

DANBURY SCHOOL REORGANIZATION
CITY OF DANBURY
PARK AVENUE ELEMENTARY
DANBURY, CONNECTICUT

SECTIONS & DETAILS

CLASSROOM/LIBRARY & CAFETERIA ADDITIONS

STATE OF CONNECTICUT JAMES B. DeSTEFANO #11986 REGISTERED PROFESSIONAL ENGINEER

S15-2

CHECKED BY JBD	SCALE AS NOTED	DATE 24 JULY 1991	JOB NO. 9012.02

139433
Design Products Co. Inc.