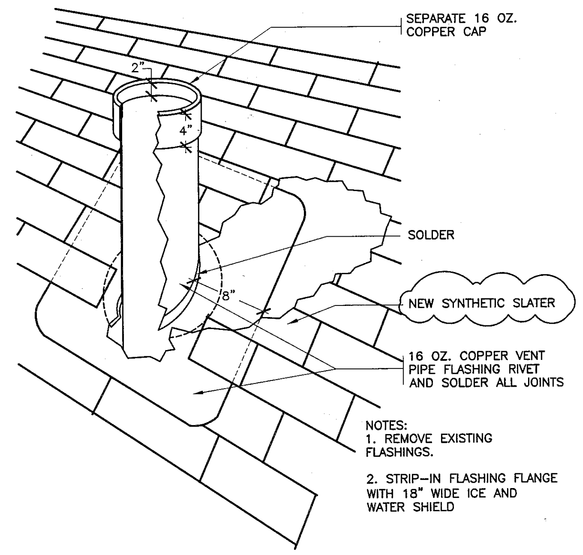

25 REVISED VENT PIPE (SLATE ROOF)
SCALE: N.T.S.

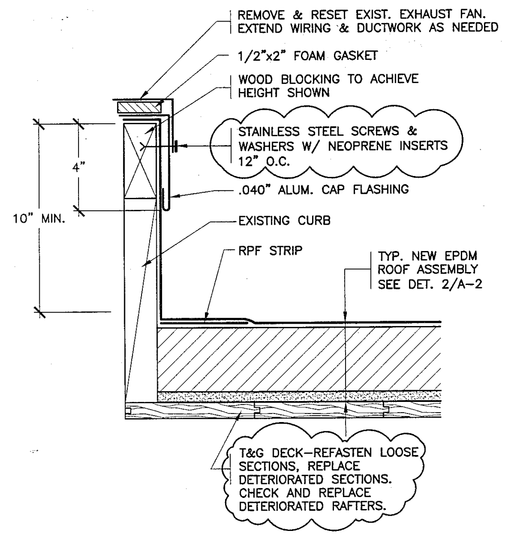

26 REVISED EXHAUST FAN
SCALE: 3" = 1'-0"

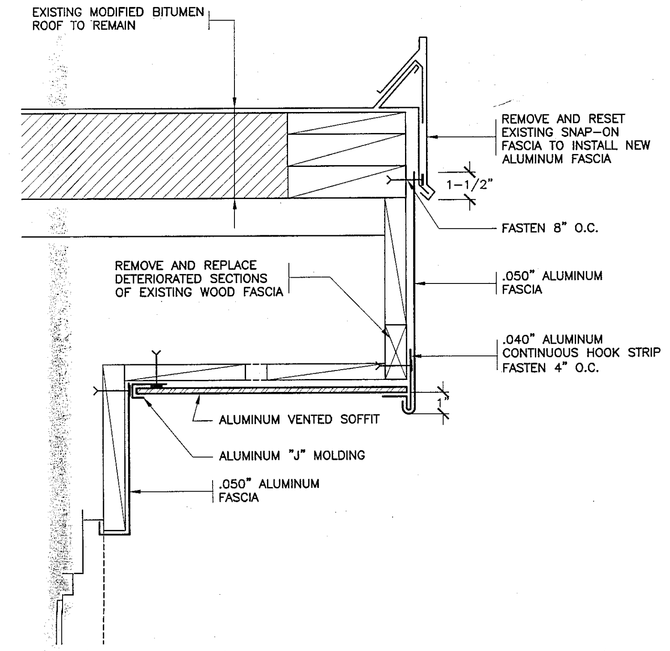

27 REVISED EAVE AT EXISTING ROOF
SCALE: 3" = 1'-0"

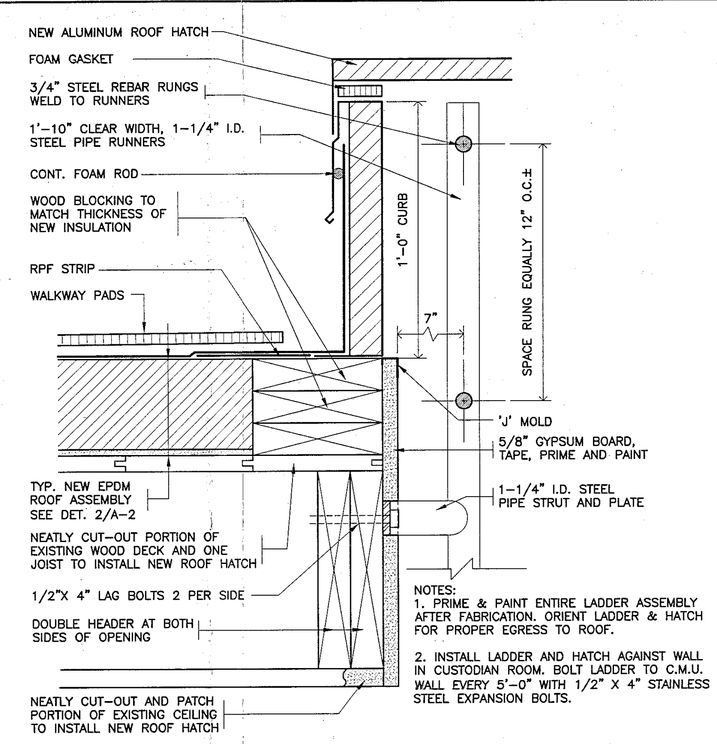

28 NEW ROOF HATCH
SCALE: 3" = 1'-0"

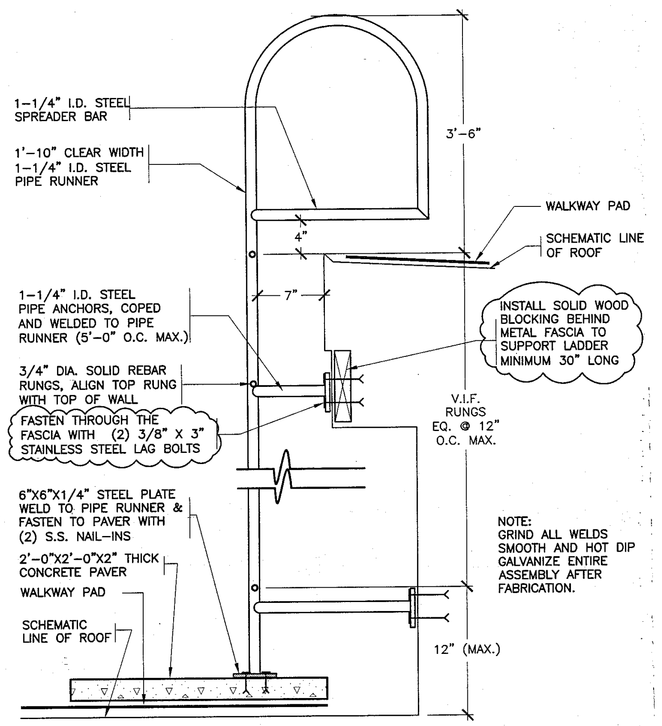

29 NEW ROOF LADDER
SCALE: N.T.S.

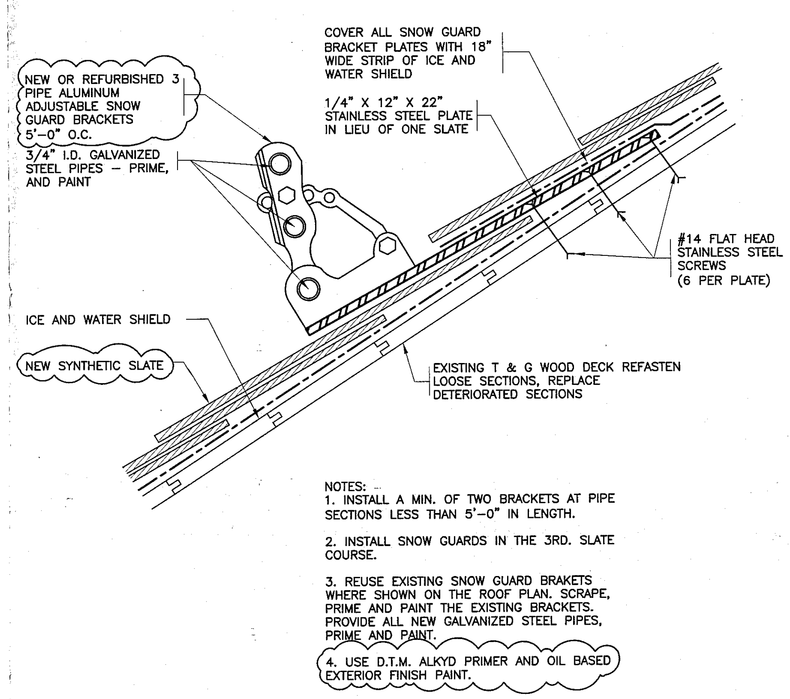

30 SNOW GUARD
SCALE: N.T.S.

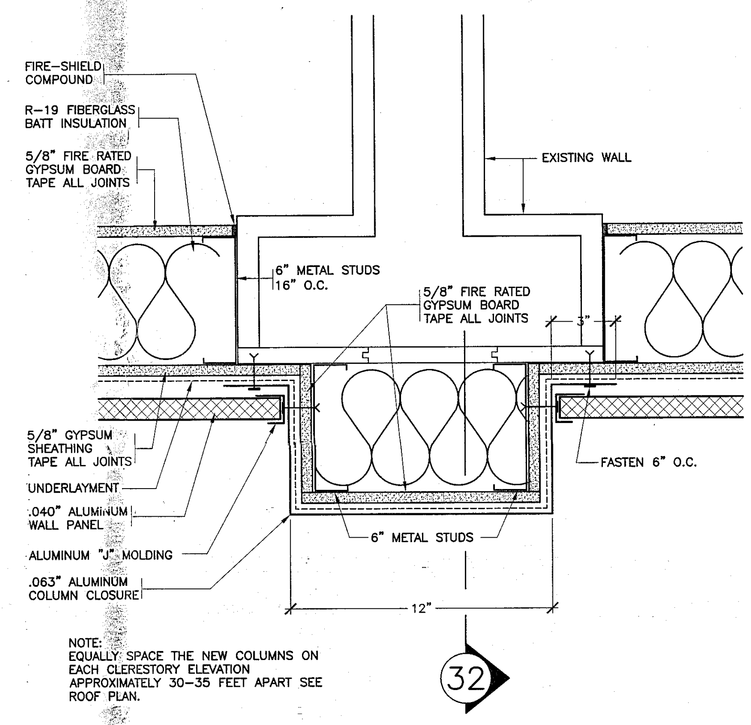

31 PLAN VIEW AT NEW COLUMN
SCALE: N.T.S.

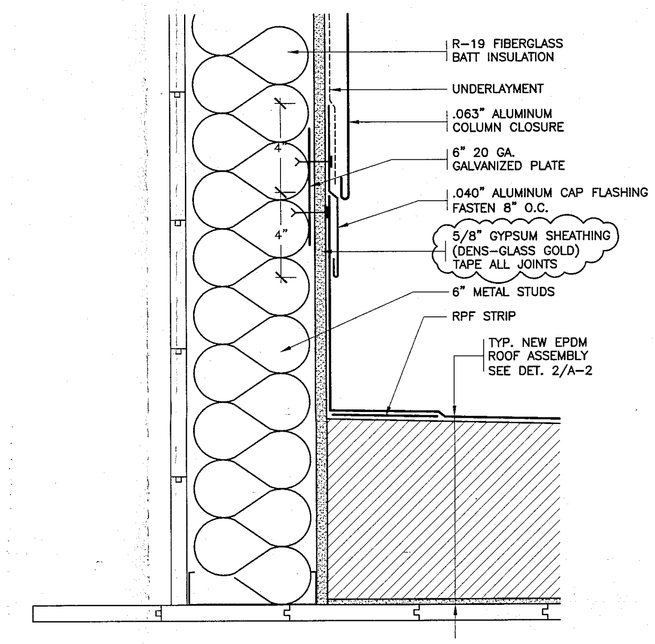

32 SECTION AT NEW COLUMN
SCALE: N.T.S.

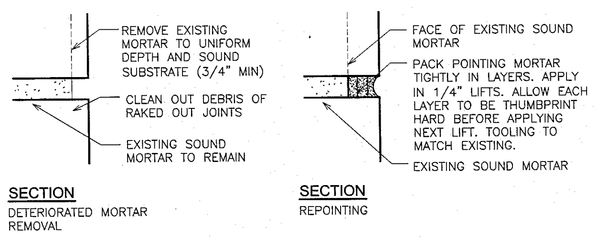

33 DETAIL - MASONRY REPOINTING
SCALE: N.T.S.

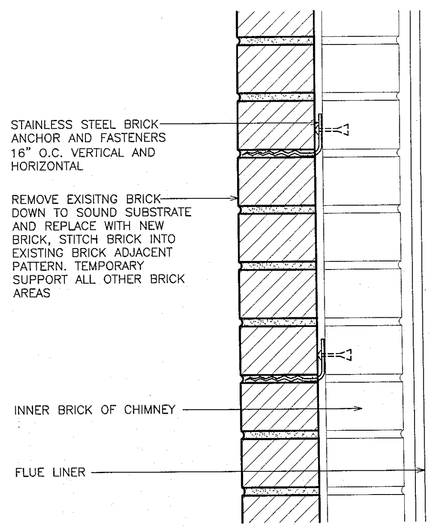

34 DETAIL - BRICK REPLACEMENT
SCALE: N.T.S.

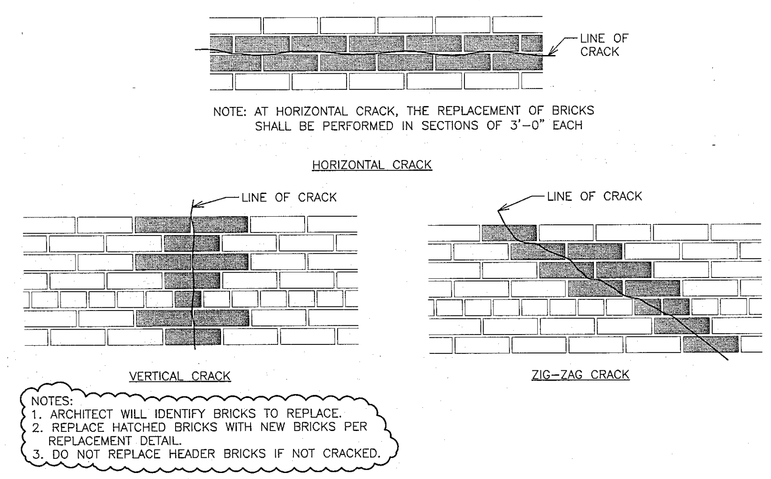

35 DETAIL - BRICK STICHING PATTERNS
SCALE: N.T.S.

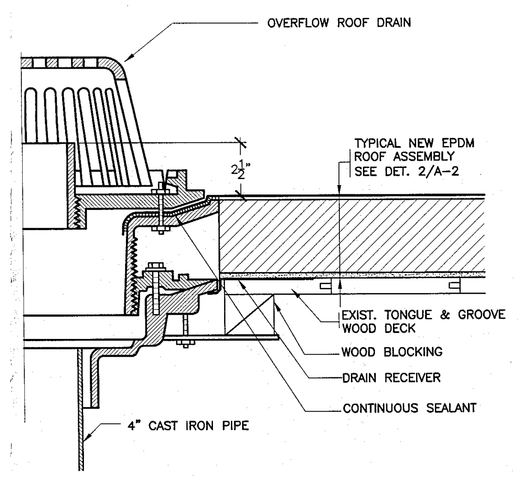

36 OVERFLOW ROOF DRAIN
SCALE: N.T.S.

AS PER USA CONGRESS ARCHITECTURAL WORKS COPYRIGHT PROTECTION ACT OF 1990 ALL IDEAS AND DESIGNS INCLUDING DERIVATIVES THEREOF, ALL DRAWINGS AND SPECIFICATIONS CONSTITUTE PLANS, DESIGNS, DRAWINGS AND SPECIFICATIONS OF FULLER AND D'ANGELO, P.C. (F&D). THE DRAWINGS AND SPECIFICATIONS AS INSTRUMENTS OF SERVICE BY FULLER AND D'ANGELO, P.C. (F&D) FOR THIS PROJECT ONLY AND REMAIN THE PRODUCT AND PROPERTY OF F&D. ANY REPRODUCTION WITHOUT THE PRIOR CONSENT OF F&D IS PROHIBITED.

FULLER D'ANGELO P.C.
ARCHITECTS PLANNERS
48 RIDGEWOOD ROAD ELMSFORD NEW YORK 10523
TEL. 914.592.4444 FAX. 914.592.1717
EMAIL: FULLERANDDANGELO@MSN.COM
Copyright 2009 All Rights Reserved by FULLER & D'ANGELO P.C.

STATE OF CONNECTICUT JOHN D'ANGELO #11371 LICENSED ARCHITECT

PROJECT TITLE
PARK AVENUE ELEMENTARY SCHOOL
ROOFING IMPROVEMENT
PARK AVENUE
DANBURY, CT 06810

DRAWING TITLE
ROOF DETAILS & POINTING DETAILS

DATE	ISSUED TO
8-24-2009	BLDG DEPT REVS
7-09-2009	BID
6-23-2009	BSF
6-01-2009	CITY
1-26-2009	90% SUBMISSION

SCALE: AS NOTED
DRAWING NO. A-4
DRAWN BY: F & D
CHECKED BY: F & D
FILE NO. 08870.00

DANBURY BID NO. 07-09-1041
C.T. BUREAU OF SCHOOL FACILITIES PROJECT NO. TEMP 034 - GPVX

PLOT DATE: August 25, 2009 - 8:50am

FILE: I:\08870.00 Danbury Park Ave. Elementary\DRAWINGS\CURRENT\1-F&D\A-4 Danbury ES Details 25- Rev 2009 0824.dwg