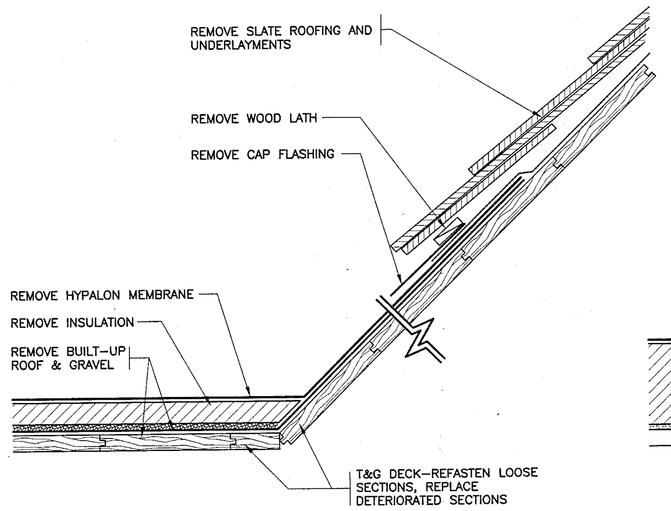

13 EXISTING TRANSITION
SCALE: 3" = 1'-0"

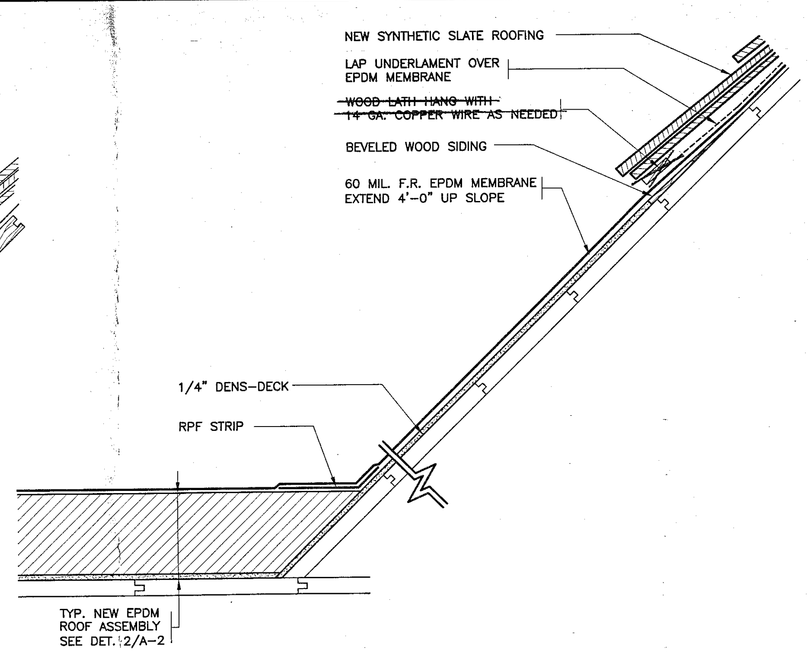

14 REVISED TRANSITION
SCALE: 3" = 1'-0"

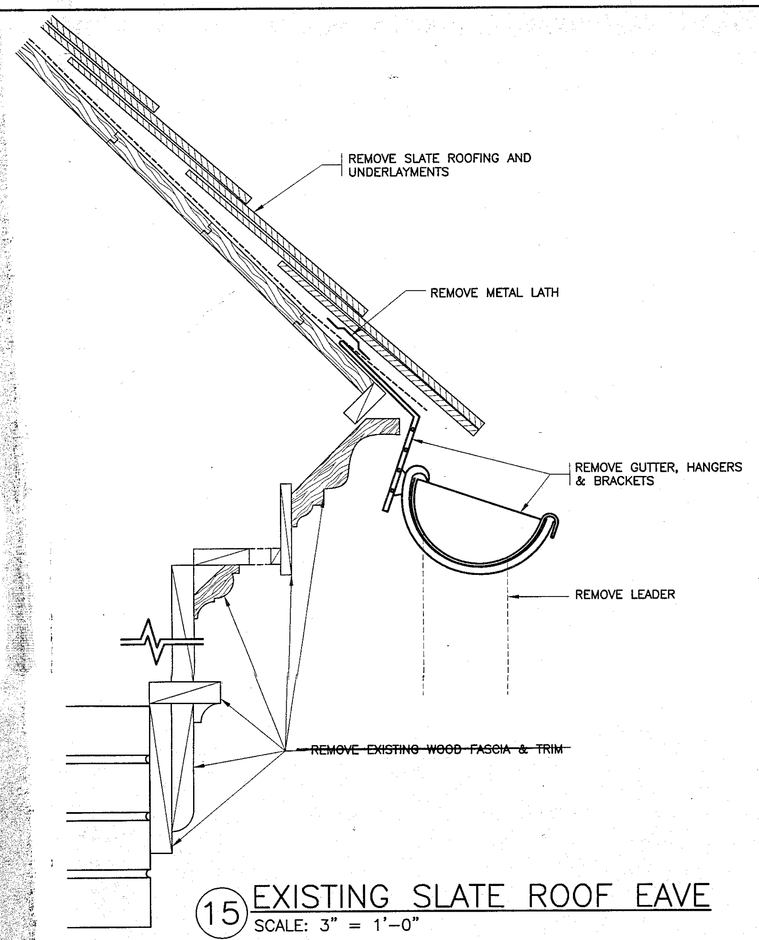

15 EXISTING SLATE ROOF EAVE
SCALE: 3" = 1'-0"

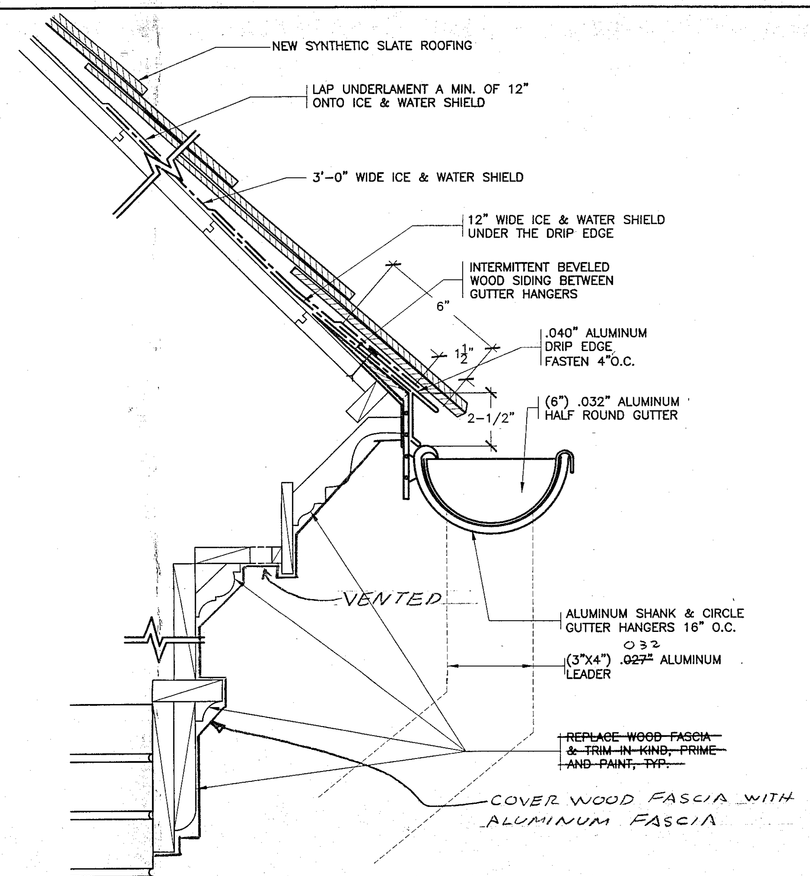

16 REVISED SLATE ROOF EAVE
SCALE: 3" = 1'-0"

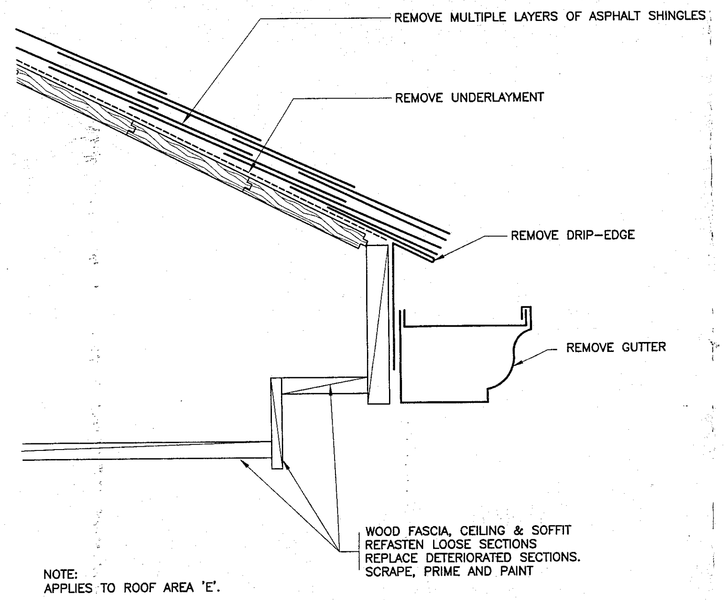

NOTE:
APPLIES TO ROOF AREA 'E'.

17 EXISTING EAVE
SCALE: 3" = 1'-0"

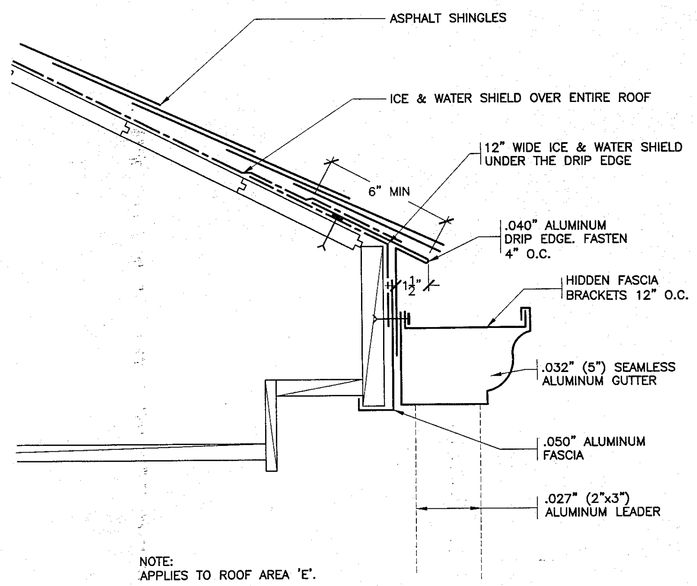

NOTE:
APPLIES TO ROOF AREA 'E'.

18 REVISED EAVE
SCALE: 3" = 1'-0"

NOTE:
SEE DET. 18/A-2 FOR TYPICAL REMOVALS.

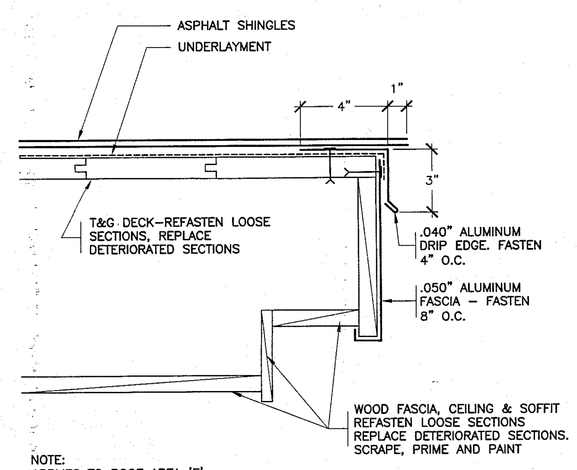

NOTE:
APPLIES TO ROOF AREA 'E'.

19 REVISED RAKE
SCALE: 3" = 1'-0"

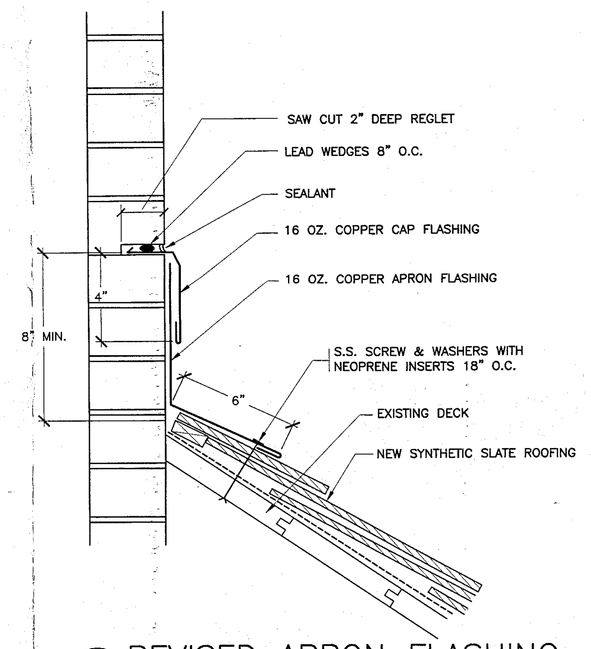

20 REVISED APRON FLASHING
SCALE: 3" = 1'-0"

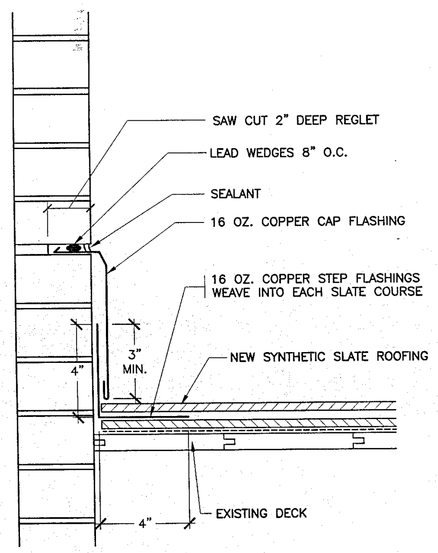

21 REVISED STEP FLASHING
SCALE: 3" = 1'-0"

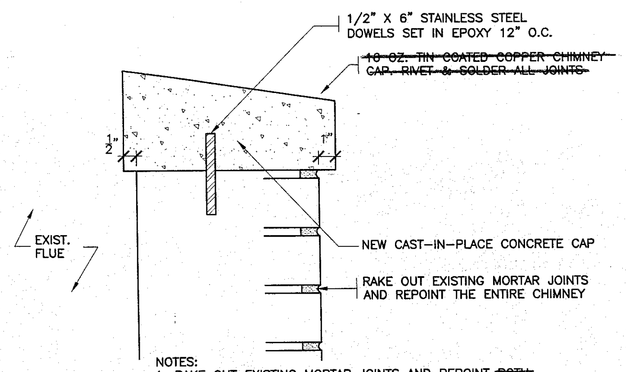

NOTES:
1. RAKE OUT EXISTING MORTAR JOINTS AND REPOINT ~~BOTH~~ CHIMNEYS FROM THE TOP TO THE CAP FLASHING. REMOVE AND REPLACE ALL DETERIORATED AND CRACKED BRICKS (ESTIMATED QUANTITY 200 SQ. FT.).

22 REVISED CHIMNEY CAP
SCALE: N.T.S.

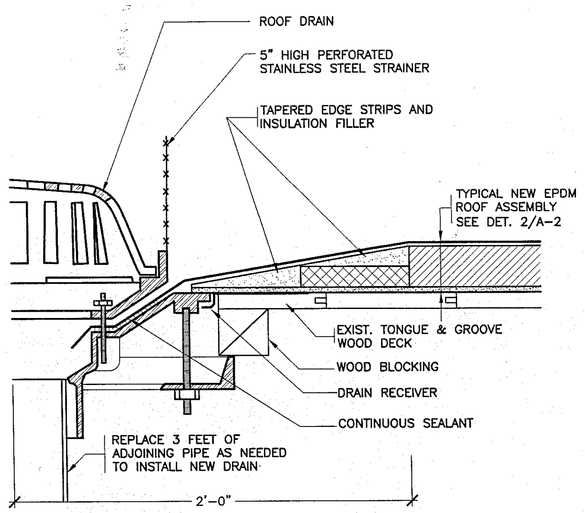

NOTES:
1. REMOVE EXISTING ROOF DRAINS AND RELATED FLASHINGS.
2. INSTALL TAPERED EDGE STRIPS & INSULATION FILLERS TO CREATE A 4 FT x 4 FT. SQUARE SUMP AT EACH DRAIN.

23 REVISED ROOF DRAIN
SCALE: N.T.S.

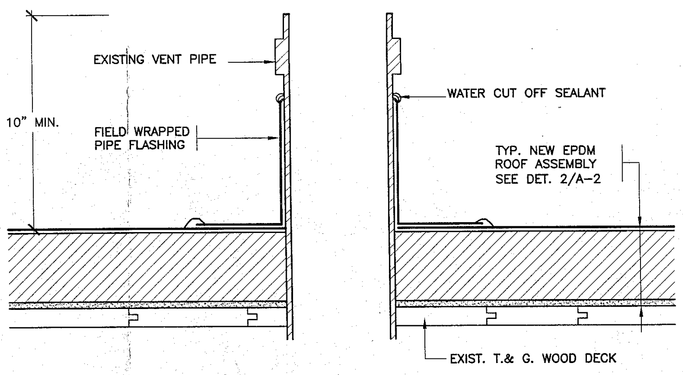

NOTES:
1. REMOVE ALL EXISTING FLASHINGS.
2. REMOVE KENNEDY COUPLINGS AND EXTEND VENT PIPES TO MEET MIN. HEIGHT REQUIREMENT.

24 REVISED EPDM VENT PIPE
SCALE: 3" = 1'-0"

AS-BUILT DRAWINGS

RECORD DRAWING CERTIFICATION
☑ AS BUILT-CHANGES AS NOTED
☐ AS BUILT-NO CHANGES

CONTRACTOR
NAME PAUL POSTOLAKIS
SIGNATURE
TITLE PRESIDENT
DATE 12-4-09

PROJECT COORDINATOR
NAME
SIGNATURE
TITLE
DATE

LEED INDUSTRIES
114 PEARL STREET
PORT CHESTER, N.Y. 10573

PROJECT TITLE
PARK AVENUE ELEMENTARY SCHOOL
ROOF REPLACEMENT
50 PARK AVENUE
DANBURY, CT 06810

DRAWING TITLE
ROOF DETAILS

DATE	ISSUED TO
8-24-2009	BLDG DEPT REVS
7-09-2009	BID

SCALE: AS NOTED
DRAWN BY
CHECKED BY
DRAWING NO. A-3
FILE NO. 08870.00

DANBURY BID NO. 07-08-10-01
C.T. BUREAU OF SCHOOL FACILITIES PROJECT NO. TEMP 054 - GPVX

PLOT DATE: December 08, 2009 - 10:19am

FILE: I:\08870.00 Danbury Park Ave. Elementary\DRAWINGS\SUBMISSIONS\AS BUILTS\A-3 Danbury ES Details 13-24 Rev 2009 0824.dwg